Universiteit Leiden
The Netherlands

Facioscapulohumeral disease

Padberg, G.W.A.M.

Citation
Padberg, G. W. A. M. (1982, October 13). *Facioscapulohumeral disease*. Retrieved from https://hdl.handle.net/1887/25818

Version:	Corrected Publisher's Version
License:	Licence agreement concerning inclusion of doctoral thesis in the Institutional Repository of the University of Leiden
Downloaded from:	https://hdl.handle.net/1887/25818

Note: To cite this publication please use the final published version (if applicable).

Cover Page

Universiteit Leiden

Leiden University Repository

The handle http://hdl.handle.net/1887/25818 holds various files of this Leiden University dissertation.

Author: Padberg, George Waltherus Adrianus Maria
Title: Facioscapulohumeral disease
Issue Date: 1982-10-13

Facioscapulohumeral disease

G. PADBERG

Facioscapulohumeral disease

Proefschrift

TER VERKRIJGING VAN DE GRAAD VAN DOCTOR
IN DE GENEESKUNDE AAN DE RIJKSUNIVERSITEIT TE LEIDEN,
OP GEZAG VAN DE RECTOR MAGNIFICUS DR. A.A.H. KASSENAAR,
HOOGLERAAR IN DE FACULTEIT DER GENEESKUNDE,
VOLGENS BESLUIT VAN HET COLLEGE VAN DEKANEN
TE VERDEDIGEN OP WOENSDAG 13 OKTOBER 1982
TE KLOKKE 15.15 UUR

door

GEORGE WALTHERUS ADRIANUS MARIA PADBERG
geboren te Wassenaar in 1948

Promotor : Prof. Dr. G.W. Bruyn
Co-promotor Dr. G.K. van Wijngaarden

Referenten : Prof. Dr. A.W. Eriksson
Prof. Dr. L.N. Went

ISBN 90 70176 71 8

© 1982 by the author.
No part of this publication may be translated or reproduced in any form, by print, photoprint, microfilm, or any other means, without the prior written permission from the author.

Printed in the Netherlands by Intercontinental Graphics, H.I. Ambacht.

Contents

INTRODUCTION 11

CHAPTER 1. HISTORICAL NOTES 13

CHAPTER 2. FACIOSCAPULOHUMERAL DISEASE: REVIEW OF THE LITERATURE

2.1. Introduction 20
2.2. Presenting symptoms 21
2.3. Presenting signs 22
2.4. Precipitating factors 23
2.5. The facial muscles 23
2.6. The upper extremities, shoulder girdle and neck muscles 25
2.7. The truncal muscles 29
2.8. The lower extremities and the pelvic girdle muscles 30
2.9. Pseudohypertrophy of muscles 32
2.10. Reflexes 32
2.11. Contractures 33
2.12. Asymmetry of muscle involvement 33
2.13. Skeletal deformities 33
2.14. The cardiac muscle 34
2.15. Concomitant diseases 36
2.16. Abortive cases 36
2.17. The infantile form 37
2.18. The late adult onset form 39
2.19. Age at onset 39
2.20. The mode of inheritance 42
2.21. The penetrance 44
2.22. Sex influences 45
2.23. Linkage studies 45
2.24. Prevalence and incidence 46
2.25. Fitness 47
2.26. Mutation rate 47
2.27. Clinical course and disability 48

	2.28.	Therapy	49
	2.29.	Life expectancy and causes of death	50
	2.30.	Biochemical studies	51
	2.31.	Electromyography	54
	2.32.	Muscle biopsy	57
	2.33.	Summary	60
CHAPTER 3.	THE FACIOSCAPULOHUMERAL SYNDROME: DIFFERENTIAL DIAGNOSIS OF FACIOSCAPULOHUMERAL DISEASE		
	3.1.	Introduction	63
	3.2.	Scapuloperoneal muscular dystrophy	64
	3.3.	Congenital myopathies	67
	3.4.	Polymyositis	71
	3.5.	Myopathies with abnormal mitochondria	75
	3.6.	Scapuloperoneal amyotrophy with sensory disturbances (Davidenkow's syndrome)	79
	3.7.	Spinal muscular atrophies	83
	3.8	Facioscapulohumeral and scapuloperoneal syndromes with cardiomyopathy	94
	3.9.	Summary	101
CHAPTER 4.	FACIOSCAPULOHUMERAL DISEASE: PERSONAL OBSERVATIONS		
	4.1.	Introduction	103
	4.2.	The patients	105
	4.3.	The kindreds	110
	4.4.	Symptoms	128
	4.5.	Precipitating factors	131
	4.6.	Presenting signs	131
	4.7.	The facial muscles	133
	4.8.	The shoulder girdle, the pelvic girdle and the limb muscles	134
	4.9.	The truncal muscles	138
	4.10.	Asymmetry of muscle involvement	139
	4.11.	Reflexes	142
	4.12.	Muscle contractures	142
	4.13.	Hypertrophy of muscle	143

	4.14.	Skeletal abnormalities	144
	4.15.	The cardiac muscle	144
	4.16.	Concomitant diseases	145
	4.17.	The age of onset	146
	4.18.	Abortive cases	150
	4.19.	Infantile onset and onset in early childhood	152
	4.20.	The clinical course and disability	155
	4.21.	Death	160
	4.22.	Penetrance	160
	4.23.	Sex influences	162
	4.24.	Genetic heterogeneity	163
	4.25.	Environmental influences	164
	4.26.	Fitness	164
	4.27.	Genealogical examination	165
	4.28.	Prevalence	166
CHAPTER 5.	LABORATORY STUDIES		
	5.1.	Introduction	168
	5.2.	Serum creatine kinase activity	168
	5.3.	Genetic linkage	172
	5.4.	Electrophysiological studies	175
	5.5.	Muscle biopsies	178
	5.6.	Discussion	187
CHAPTER 6.	CASES RESEMBLING FACIOSCAPULOHUMERAL DISEASE		191
CHAPTER 7.	GENERAL DISCUSSION		195
SUMMARY			203
SAMENVATTING			207
CURRICULUM VITAE			213
ACKNOWLEDGEMENTS			214
REFERENCES			217

LIST OF ABBREVIATIONS

ATP-ase	adenosine triphosphatase
A-V	atrio-ventricular
BSAPP	brief small abundant polyphasic potentials
CK	creatine kinase
ECG	electrocardiogram
EMG	electromyogram
FSH	facioscapulohumeral
FSHD	facioscapulohumeral disease
FSHS	facioscapulohumeral syndrome
HE	haematoxilin and eosin
LD	lactic dehydrogenase
MRC	medical research council
NADH-TR	NADH-tetrazolium reductase
PAP	persistent atrial paralysis
PK	pyruvate kinase
PMA	peroneal muscular atrophy
SGOT	serum glutamic oxaloacetic transaminase
SGPT	serum glutamic pyruvic transaminase
SMA	spinal muscular atrophy
SP	scapuloperoneal
SPD	scapuloperoneal muscular dystrophy

Introduction

The purpose of this study is to discuss several aspects of facioscapulohumeral disease, also called "autosomal dominant facioscapulohumeral muscular dystrophy" or "Landouzy-Dejerine type of muscular dystrophy" or "Landouzy-Dejerine's disease". We consider this disorder well defined and recognizable, justifying the term facioscapulohumeral disease, abbreviated FSHD.

We studied the literature, as well as a personal series of 107 cases of FSHD. Chapter 1 reviews the major historical reports pertinent to the recognition of FSHD as an independent entity. Chapter 2 describes current knowledge on FSHD: a summary is presented at the end of this chapter. Chapter 3 discusses the differential diagnosis of FSHD. A great deal has been written on this subject, most of it causing more confusion than clarification. As it was considered necessary to argue why some reports were so obfuscating, this chapter has become quite lengthy: for those who feel that this subject should not claim so much attention, a summary is proffered. Chapter 4 deals with the results of the clinical examination of 107 patients with FSHD and Chapter 5 with the laboratory studies in some of these patients. The kindreds were ascertained through probands that had been studied at the "Muscular Research Center" (head Prof. Dr. J. Bethlem) of the University of Amsterdam and at the Neuromuscular Clinic (head Dr. A.R. Wintzen) of the Department of Neurology (chairman Prof. Dr. G.W. Bruyn) of the University of Leiden. The kindreds were examined as extensively as possible. In three instances family examination was incomplete or did not reveal autosomal dominant inheritance. These cases are discussed briefly in Chapter 6. In the last chapter some of our results are compared with concepts dominating in the literature.

In order to provide a framework for the discussion of this autosomal dominant disorder, we prefer to summarize FSHD as follows: the presenting complaints are mostly those of weakness of the shoulder girdle muscles. The clinical signs at the time of

presentation include weakness and atrophy of the shoulder girdle muscles with early involvement of the facial muscles in most cases. The disease subsequently spreads to the upper arm muscles, justifying the adjective facioscapulohumeral (Landouzy and Dejerine, 1884, 1885, 1886) and to the peroneal muscles. Weakness of the abdominal muscles may occur early. Pelvic girdle weakness is a fairly late sign in most cases. The muscle involvement is often asymmetrical. The intrafamilial and interfamilial expression of the disease is quite variable. The clinical course and rate of progression of the disease may also vary considerably from case to case. A large number of affected individuals may be asymptomatic (abortive cases). The age of onset may range from infancy to late adulthood. The penetrance of the gene is almost complete. There are no solid grounds to assume to existence of an autosomal recessive disorder resembling FSHD. The problem of the isolated case in which the examination of the family is negative, has no simple answer: there can be low expressivity of the gene in the ancestry, non-paternity, a mutation, or a different disease altogether. Although FSHD is considered a myopathy, both electromyography (EMG) and muscle biopsy may reveal features suggesting a neurogenic lesion.

Chapter 1

Historical notes

In the middle of the nineteenth century most physicians held the opinion that chronic muscular atrophy was caused by anterior horn cell disease. Hypertrophy of some muscles in patients with atrophy of other muscles was such an intriguing finding that it drew the attention of many clinicians. To Duchenne goes the credit of having presented the first lucid description of the disease that now bears his name. In a series of articles in the "Archives Générales de Médicine" of 1868 he published his "Recherches sur la paralysie musculaire pseudo-hypertrophique ou paralysie myo-sclérosique". There he presented arguments for the myopathic nature of the condition based on the electrical examination and the histology of muscles. Since he never had an opportunity to do post-mortem studies, he cited the only published autopsy report at that time, in which Eulenburg and Cohnheim had shown the brain and the spinal cord to be unaffected. The muscle hypertrophy remained a puzzling finding. Duchenne discussed the possibility of a trophic influence of the autonomous nervous system but concluded (page 571) that "en somme, la pathogénie de la paralysie pseudo-hypertrohique est très obscure".

A large part of Duchenne's articles was concerned with the differential diagnosis of pseudohypertrophic muscular paralysis which included two syndromes: these were "la paralysie atrophique graisseuse de l'enfance" and "l'atrophie musculaire graisseuse progressive de l'enfance". The former started with fever in most cases and had a rapid course. These patients probably suffered from poliomyelitis. The latter consisted of a FSH syndrome and probably was what we now would call FSHD. In his summary Duchenne observed that "l'atrophie musculaire graisseuse progressive de l'enfance débute vers l'âge de cinq à sept ans par la face où elle atrophie quelques muscles, principalement l'orbiculaire des

lèvres et les zygomatiques. Après une période stationaire de plusieurs années (de deux à trois ans) elle envahit les membres et le tronc, où elle marche de la même manière que chez l'adulte, c'est-à-dire, qu'elle suit une marche descendente, en attaquant d'abord des muscles des membres supérieurs et ceux du tronc en ne s'étendant aux membres inférieurs que dans une période assez avancée".

This description constitutes the essence of the FSH syndrome and would fit FSHD perfectly. The lack of muscular hypertrophy, the descending course of muscular involvement and the facial weakness distinguished progressive fatty muscular atrophy of infancy from pseudohypertrophic muscular paralysis. The infantile and the adult form of progressive fatty muscular atrophy were both considered to be anterior horn cell diseases. The description of the infantile form served only to provide the differential diagnosis of pseudohypertrophic muscular paralysis. Duchenne did not comment specifically on spinal cord involvement in progressive fatty muscular atrophy of infancy although that seemed a logical possibility since he quoted Cruveilhiers' "mémoire sur la paralysie musculaire atrophique" published in the "Bulletins de l'Académie de Médicine" of 1852-1853. This quotation referred to Cruveilhiers' third observation of a man with progressive muscular atrophy with facial and lingual muscle involvement who on post-mortem examination was found to have an extreme atrophy of the spinal anterior roots and of the hypoglossal nerves. Duchenne mentioned this case to illustrate that involvement of the facial muscles could occur late in the course of the adult form of progressive fatty muscular atrophy. But Duchenne did not comment upon Cruveilheirs' second observation. This concerned an 18-year old man with a severe FSH syndrome who had died in 1848 of variola and on whom autopsy showed the brain, spinal cord and the periferal nerves to be unaffected. This probably represented the first autopsy of FSHD, but it passed by unnoticed. It apparently required quite a few more years for the concept of primary muscle disease to mature.

By the time Landouzy and Dejerine made their observations, the scientific climate had changed. In 1884 Erb wrote "Uber die

juvenile Form der progressiven Muskelatrophie und ihre Beziehungen zur sogenannten Pseudohypertrophie der Muskeln", and Vulpian presented a summary of Landouzy's and Dejerine's work at a meeting of the "Académie des Sciences" on January 17th. One year later (1885), Landouzy and Dejerine published their first article in the "Revue de Médicine" about "La myopathie atrophique progressive; myopathie sans neuropathie débutant d'ordinaire dans l'enfance, par la face". There they described an autopsy on a man who died of tuberculosis when he was 24 years old. At the age of three, atrophy of the facial muscles was noted and this was his only symptom until he developed atrophy of the shoulder girdle and upperarm muscles at the age of 17. During the subsequent years the atrophy slowly progressed to involve the muscles of the trunk and pelvic girdle. There was no sensory abnormality and the tendon reflexes were absent. He never had experienced any muscle pains. Landouzy and Dejerine stressed the clinical and histological integrity of the muscles of the tongue, pharynx and larynx and also of the masseter, the temporal and the pterygoid muscles. The extraocular muscles and the levator palpebrae muscles were unaffected as well. At the viscerocranium only the facial muscles were involved. (When they mentioned "facial muscles" they referred to the muscles innervated by the seventh cranial nerve. The terms "facial muscles" and "facial weakness" will be used in this text in the same sense). At post-mortem examination they found no abnormalities on the brain, spinal cord, periferal nerves and intramuscular nerve endings. Muscles which were clinically affected, but had not completely disappeared, showed "atrophie simple du faisceau primitif, avec sclérose et adipose très légères".

Landouzy and Dejerine's patient had a younger brother and sister who were similarly affected. The pedigree (Figure 1.1.) showed a definite autosomal dominant pattern of inheritance. It is interesting to see that the disease seemingly skipped the second generation. Of course it is quite possible that the woman at issue in the second generation might have represented an abortive case. Further more, if one realizes that the father of the proband developed muscle atrophy in the shoulder girdle at

the age of 26 and noted facial involvement when he was 32 years old, all the potential pitfalls involved in the diagnosis of FSHD are already obvious from the first published pedigree.

FIGURE 1.1: FAMILY L (LANDOUZY-DEJERINE, 1885)

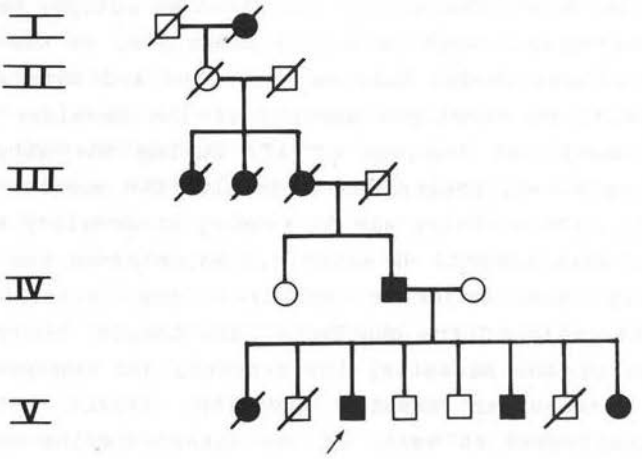

The proband fitted the description of Duchenne's "infantile form of progressive fatty muscular atrophy". Landouzy and Dejerine assumed that Duchenne's and their own descriptions were about the same disease and that they had proven its myopathic nature. The proband's father and similar familial and sporadic cases described in subsequent articles (1885-1886), led Landouzy and Dejerine to adjust the diagnostic criteria of the disorder they had named facioscapulohumeral type of progressive myopathy. The age of onset was said not necessarily to be in infancy. Furthermore, they stressed that the disease did not always start with involvement of the facial muscles. In such cases shoulder girdle weakness was the presenting symptom, some never developing facial weakness. Landouzy and Dejerine described the autopsy of a case that had lacked clinical involvement of the facial muscles but showed microscopical abnormalities, suggesting a myopathy on examination of these muscles. Although these additions brought the ideas of French authors about the myopathies somewhat closer

to the German views on this matter, the gap was not closed to the satisfaction of Erb, who had formulated and defended (1884) his unifying concept of "dystrophia muscularis progressiva". Erb was convinced that all myopathic syndromes were different manifestations of one disease, because he had seen intermediate forms between all the known clinical syndromes and because he had found the histological changes in the muscles to be essentially the same in all these cases. He did not believe that "la myopathie atrophique progressive" was different from his "juvenile Muskelatrophie". In order to minimize the clinical differences he stated (1891) that he personally never had observed involvement of the facial muscles to be the first and most prominent symptom. To prove the contrary, Remak (1884) wrote an article "Über die gelegentlichen Betheiligung der Gesichtsmuskulatur bei der juvenilen Form der progressiven Muskelatrophie" as did Mossdorf (1886): "ein zweiter Fall von Betheiligung der Gesichtsmuskulatur bei der juvenalen Muskelatrophie".

Although the concept of a primary muscle disease as a cause of a slowly progressive muscular atrophy was finally accepted by the end of the nineteenth century, the discussion about the classification of the human myopathies had only just begun. The introduction of genetical criteria proved to be very useful. Weitz (1921) was the first to recognize the possibility of autosomal dominant, autosomal recessive and X-linked recessive modes of inheritance of the myopathies. Davidenkow (1930) studied 554 cases of what he called dystrophia musculorum progressiva. Most of the cases were collected from the literature. Davidenkow was the first to recognize abortive cases of FSHD. He also drew attention to the fact that some affected members of families with FSHD failed to demonstrate facial weakness. Sjövall (1936) investigated 103 families with 161 affected persons in Sweden but his material did not include families with an autosomal dominant FSH syndrome, probably because, as Becker (1953) suggested, he had collected his cases from nursing homes and hospitals where "one rarely sees FSHD as this is a relatively benign disease". Another explanation could be that there is a large geographical

variation in the occurrence of FSHD. Julia Bell (1942, 1943) studied 1228 cases of muscular dystrophy from the literature and 113 records from the National Hospital, Queen Square, London and concluded that all three modes of inheritance seemed to occur. She divided the clinical material into three groups based on two criteria, pseudohypertrophy and facial involvement, hoping to find a certain pattern of inheritance for each group. Her first group consisted of all cases exhibiting pseudohypertrophy of muscles but cases with facial involvement were excluded. The second group contained all cases that had unaffected facial muscles and no pseudohypertrophy. The third group included all cases with weakness of the facial muscle with or without hypertrophy of muscles. Bell could not ascribe a single pattern of inheritance to each group, perhaps due to the ease with which she accepted the diagnosis of reported cases as definitely established and to the fact that in many instances the families were not completely examined, as Tyler and Winthrobe (1950) argued. This argument is of particular relevance with respect to FSHD as all Bell's 337 cases of group 3 were collected from the literature because in the 14-year period covered by the study no such cases were seen in the National Hospital.

Pseudohypertrophy and facial involvement continued to be decisive criteria in other attempts at classification of the muscular dystrophies, because the age of onset was considered too difficult to establish in many cases. Levison (1951) started from clinical criteria and concluded from eight families which he had examined personally that the FSH type of muscular dystrophy had an autosomal dominant mode of inheritance. He stressed that he had not seen patients with marked atrophy or paresis of the orbicularis oculi muscles as described by Landouzy and Dejerine (1885). He also distinguished a scapulohumeral type of muscular dystrophy that was sporadic in five families and present in two brothers of another family. Finally, he discerned an intermediate type between the FSH and scapulohumeral type in which the facial muscles were only slightly involved. The six cases of this type were all sporadic ones. However it is not stated how extensively the families were examined.

Stevenson (1953) thought an autosomal recessive mode of inheritance to be present in his families with facial involvement and included these families in his group of "autosomal recessive limb-girdle muscular dystrophy", as he judged weakness of the facial muscles an insufficient criterium for separation into two different diseases. Stevenson's examination of the families is certainly open for criticism, as will be discussed later. His view did not harmonize with the experience of many clinicians who had become accustomed to find an autosomal dominant mode of inheritance in most families with muscular dystrophy and involvement of the facial muscles. Therefore, Walton and Nattrass (1954) encountered little objection when they defined the pattern of inheritance of FSHD being usually autosomal dominant and only occasionally autosomal recessive. These authors were impressed by the occurrence of abortive cases, that can obscure the true pattern of inheritance in many families. Walton and Nattrass (1954) stressed that "the question of minor facial involvement is of the greatest importance and may well be a reason for confusion in published work since many cases which were truly FSH may have been classified as scapulohumeral".

The classification of the muscular dystrophies given by Walton and Nattrass has proven to be very successful and formed the basis of all other attempts at classification thereafter. It ended several decades of confusion about FSHD.

Chapter 2

Facioscapulohumeral disease: review of the literature

2.1. Introduction

Chung and Morton (1959) classified a large number of patients with hereditary neuromuscular disorders according to the pattern of inheritance. They found that the patients with pedigrees suggesting autosomal dominant inheritance fitted the clinical picture of FSHD, as outlined by Walton and Nattrass (1954). Patients with pedigrees suggesting other patterns of inheritance demonstrated only a slight overlap of clinical findings with FSHD. Chung and Morton (1959) concluded that nearly all cases of FSHD could be diagnosed on clinical criteria only. Statistical comparison of anamnestic and clinical data revealed a high degree of resemblance of cases within one family, while a significant difference was found when families were compared among each other. This was interpreted as possibly due to multiple alleles or alternative loci determining FSHD, although the possibility could not be excluded that the apparent similarities of sibs were the result of systematic biases in reporting the onset of the disease. Chung and Morton (1959) could not separate the group of patients with autosomal dominant inheritance into more homogeneous subcategories of the basis of the available evidence. The evidence consisted of personal cases collected in the State of Wisconsin and of cases selected from the literature, including the reports of Sjövall (1936) from Sweden, Levison (1951) from Denmark, Stevenson (1953; 1955) from Northern Ireland, Becker (1953) from Baden, Germany, Lamy and Grouchy (1954) from France, and Walton (1955) from Durham and Northumberland, England. These studies still from much of the basis of our knowledge of the clinical picture of FSHD. Only few other family studies of FSHD were reported since 1950. (Tyler and Stephens, 1950; Boyes, 1950; Walton, 1956; Kazakov et al., 1974).

Many authors though, have written on neuromuscular disorders and commented on FSHD from personal experiences.

2.2. Presenting symptoms

Facial weakness will often go unnoticed: in over 60% of Walton's cases (1955) neither the patients nor their families were aware of it. Inability to whistle or to close the eyes completely when asleep, are often considered a mild quirk of nature. Chung and Morton (1959) reported facial onset of FSHD in 20% of their cases. It is unclear whether they accepted inability to whistle as a symptom indicating facial weakness. Several authors like Brooke (1977), suggested a higher frequency of facial onset by pointing out that many patients with FSHD never had been able to whistle. The frequency of this symptom in an unselected population is unknown nor is it clear how often this symptom is due to facial muscle weakness. If facial onset is present, it is a strong argument for the diagnosis FSHD, since it was not noticed in any other type of muscular dystrophy as described by Chung and Morton (1959).

The most frequently encountered presenting symptoms are those of shoulder girdle weakness Chung and Morton (1959) reported shoulder girdle onset in 77% of their cases. Difficulties at gymnastics while climbing a rope or using the trapeze or the bars, excessive fatigue when writing on a blackboard, difficulties in placing objects on a shelf or working above shoulder level, and drooping of the shoulders are the complaints most often heard. Combing hair or shaving will require special tricks like resting the arms on a table. Several articles mention pain in the shoulder girdle in relation to the development or a exacerbation of the disease (Dubowitz and Brooke, 1973; Bradley, 1979). The significance of this symptom is not known. It may be related to the extensive inflammatory infiltrates occasionally found in the muscle biopsies of patients with FSHD (Munsat et al., 1972). Quite often it may take a fair degree of shoulder girdle weakness before complaints arise. Judging the onset of the

disease by symptoms is likely to result in a much higher age of onset than if the onset could be estimated from the first detectable signs. If peroneal weaknes is present early in the course, occasionally this may lead to the first symptoms, such as tripping over small obstacles, or difficulty running.

Chung and Morton (1959) reported pelvic girdle onset in 12% of their cases, but Becker (1953) never noted symptoms suggesting pelvic girdle onset. He stressed the descending order of muscle involvement in FSHD. This descending course was also reported by Tyler and Stephens (1950).

2.3. Presenting signs

Knowledge of the presenting signs in FSHD is important for the discussion of the differential diagnosis (see chapter 3): FSHD may start either in the facial muscles or in the shoulder girdle muscles, as was demonstrated in the first family described by Landouzy and Dejerine (1885). The exact number of cases with facial onset probably will never be known, since facial weakness frequently remains unnoticed. One finds facial weakness as the only sign of the disease when abortive cases are discovered during a family examination or when anxious parents, who are familiar with the disease, bring a child to the doctor. The most common presenting signs are facioscapular weakness and atrophy (Tyler and Stephens, 1950). Probably next in frequency is shoulder girdle weakness, although accurate numbers are not known. Humeral i.e. upper arm weakness will develop later in the course of the disease and is never reported to be the presenting sign in FSHD. In those cases where peroneal weakness gives rise to the presenting symptoms, on clinical examination shoulder girdle weakness is also found. Therefore (facio)scapuloperoneal weakness may be the presenting syndrome in FSHD, and the disorders described as scapuloperoneal syndromes, should be included in the differential diagnosis of FSHD. Pelvic girdle weakness being the sole and presenting sign of FSHD has not been reported.

2.4. Precipitating factors

Trauma, especially to the shoulder girdle, has been implicated by physicians (Boyes et al., 1950) and by patients (Becker, 1953) to precipitate the disease. Becker (1953) noticed this phenomenon to be more frequent in his group of sporadic cases of FSHD and thought this the result of a need of explanation when visible heredity was lacking. Boyes et al.(1950) also considered unusual physical strain as a possible provoking mechanism in individuals who are "genetically susceptible" to the disease. This could explain the asymmetric onset of the disease in the right arm of a waitress who was under his care. Becker (1953) who discussed the problem of physical strain at length, was very sceptical about this mechanism and did not accept this explanation in hereditary cases.

Other factors which, especially in the older literature, were considered to play a role were infectious diseases. Becker (1953) had found no infectious diseases in relation to the onset of symptoms in his autosomal dominant cases but cited Robinson (1925) who had observed that typhoid fever in one case and influenza in tho other cases had aggravated the muscle weakness. Becker (1953) concluded that the evidence was too flimsy to accept a causal relation. Tyler and Stephens (1950) noted that intercurrent illnesses had little effect on the rate of progression but that immobilisation, paricularly by body casts, resulted in rapid progression of the muscular atrophy. The latter observation has been confirmed by many authors. At present no one believes in a particular precipitating factor in the onset of FSHD.

2.5. The facial muscles

In the majority of cases, facial weakness is present early in the course of the disease, but facial weakness is not obliga-

tory to the diagnosis FSHD. Becker (1953) found the facial muscles to be spared in 18.7% of his cases of autosomal dominant FSHD, and Chung and Morton (1959) in 16.8% of their collected cases. This implies that in families with FSHD quite a few members will start with shoulder girdle weakness while facial weakness may develop later or not at all. Tyler and Stephens (1950) found the zygomaticus and orbicularis oris muscles the first to be affected, although the early detection of weakness in these muscles may be related to their particular function. Weakness of the zygomaticus muscles results in an inability to raise the corners of the mouth and, when the patient smiles, his mouth moves in a horizontal direction producing a grin more than a smile, thereby depriving the smile of its emotional quality ("rire en travers" or transverse smile). When the orbicularis oris is weak, pursing of the lips, whistling, and retaining air under pressure becomes impossible. When viewed from the side, the lips have a pouting appearance due to loss of the normal upward curvature of the lower lip. In many cases the lips appear to be thickened (Becker, 1953). In severe cases the upper lips lose all their mobility and appear to be elongated forming the so-called "bouche de tapir". Brooke (1977) drew attention to the small dimples that sometimes are present on both sides of the corners of the mouth. They deepen when the patient smiles or tries to show his teeth.

The orbicularis oculi muscles generally seem to be less affected than the muscles of the lower part of the face. In the beginning the eyelashes cannot be buried completely on forceful closure of the eyes. If the weakness progresses, a small rim of the sclera becomes visible on an attempt to close the eyes, because the extraocular muscles are never involved in this disease and a normal Bell's phenomenon can occur. In these cases usually blinking is slowed and incomplete. At this stage other facial muscles may become involved as well, resulting in an unlined forehead and a smooth and expressionless face, that originated the term "facies myopathica" or myopathic face (Landouzy and Dejerine, 1885). A frequent finding is the occurrence of an asymmetric involvement of the facial muscles some-

times resulting in an awkward expression. The literature offers no explanation for the asymmetric facial weakness. Data on the frequency of asymmetric involvement are not available. There are also no data on the degree of facial weakness. Probably this is partly due to the fact that there is no proper grading system for weakness of the facial muscless. Although the degree of facial involvement is quite variable, severe weakness without involvement of the shoulder girdle muscles has never been reported. The early and servere involvement of the facial muscles as described in the first family of Landouzy an Dejerine (1885) has led several authors like Erb, Levison, and Becker to remark explicitly that they never had observed this phenomenon. On clinical and post-mortem examination the muscles innervated by the trigeminal, the glossopharyngeal, the vagal and the hypoglossal nerve were never found to be affected. Bradley (1979) reported weakness of the masseter and tongue muscles in a small percentage of his cases, but his numbers are sometimes misleading since he included the family with a FSH syndrome previously reported by Hudgson et al. (1972) in his series. This family had a mitochondrial myopathy (see section 3.5.), and the clinical findings were definitely distinct from the ones in FSHD as were the histopathological and biochemical examinations. Therefore, Bradley's figures are not quite representative for FSHD.

A progressive ptosis and extraocular weakness are no part of FSHD. The patient reported by Winkler and Van Der Weijde (1889) as FSHD with progressive ophthalmoplegia was probably suffering from another disease. These same authors suggested a defect in the motor end plate in this case, a rather modern view at that time.

2.6. The upper extremities, shoulder girdle and neck muscles

It is convenient to describe the weakness and atrophy in FSHD in sections on the upper extremities, the trunk and the lower extremities respectively, as this is the general course of spread of the disease. It is impossible to describe the spread

from one muscle to another, since there is no constant sequence. This descending course and the autosomal dominant inheritance are the main features of FSHD (Becker, 1953).

Grading of muscle weakness by manual testing has only been done by a few authors (Bradley, 1979). The reasons for this are obvious. The axial muscles are difficult to grade if one uses a system like the M.R.C. scale. If the scapula loses its fixation, proper testing of shoulder girdle muscles becomes extremely difficult. The causes of the change of position of the scapula have not been properly described. It is not clear if this is the result of a lack of strength of certain muscles or relatively too much strength of other muscles or both. If the scapula cannot be fixed, with a certain manoeuvre one might not be testing the same muscles as in the case of an unaffected person. One could overcome this problem by testing only certain skills and abilities as suggested by Brooke (1977), but then one tests functions and not individual muscles. Manual muscle testing may only be more or less accurate and reproducible in testing extremity muscles. Mechanical testing of muscles in FSHD has never been reported. Apart from facial muscle weakness, one of the earliest findings in FSHD is the gradual loss of fixation of the scapula. The muscles involved are the rhomboids, the lower part of the trapezius and the serratus anterior muscles. This will result in several visible changes. The scapulae rotate slightly laterally, and move upward, laterally and anteriorly over the thorax. If the rhomboid and serratus weakness progresses, scapulae alatae appear. The change of position of the scapulae contributes to the development of drooping of the shoulders. The clavicles lose their normal upward slope, assuming a horizontal position, rotate anteriorly for reasons poorly explained and ultimately sometimes they may even slope downwards. Another early finding in FSHD is the involvement of the latissimus dorsi and the sternocostal part of the pectoralis muscles (Tyler and Stephens, 1950; Chyatte et al., 1966). Wasting of the latter will result in a flattened outline of the anterior thoracic wall, with a change of the direction of the axillary crease, running more horizontally instead of vertically, and pointing at the sternoclavicular joint. In more

advanced cases wasting of the anterior neck muscles and the pectoralis muscles result in a distinct prominence of the clavicles at the base of the neck (Brooke, 1977). When the patient is seen from the front a small, typical, but unexplained lump may sometimes be seen in the contour of the trapezius on its slope to the acromion. Atrophy of the supraspinatus and infrasinatus may be visible and, due to the localisation of these muscles, quite striking. Landouzy and Dejerine (1885) found these muscles to be spared but most subsequent authors noted weakness and wasting of these muscles, the frequency of which amounted to 90% of Bradley's cases (1979). If the scapula has lost its fixation, the deltoid muscle cannot be properly tested, but if the scapula is held to the thorax by the examiner's hand, the deltoid muscle is often observed to be minimally affected. The sparing of the deltoid muscle which Chyatte et al. (1966) thought characteristic of FSHD, occasionally, and falsely, induces the unwary physician to pose the diagnosis of hypertrophy, particularly so when the surrounding muscles are conspicuously atrophic. Others found incomplete sparing of the deltoid muscles (Tyler and Stephens, 1950; Bradley, 1979) and noted proximal atrophy with distal sparing or atrophy of only the posterior muscle bellies. Another feature on inspection may be the internal rotation of the arms so that the backs of the hands are presented when one sees the patient from the front. This may be due to the changed position of the scapula but it is not clear if relatively strong internal rotators play a role as well. Chyatte et al. (1966) pointed out specifically that the teres major and subscapularis muscles, just like the deltoid muscles, are spared in FSHD. This has not been confirmed by others. The teres major and subscapularis muscles were often not specifically mentioned (Tyler and Stephens, 1950; Bradley, 1979). The time between the onset of shoulder girdle weakness and the onset of upper arm weakness may be quite variable. The atrophy in the upper arms may become quite severe sometimes even early in the course of the disease resulting in so-called "Popeye" arms, because of the relative sparing of the lower arm muscles.

The visible signs as described so far all reflect a certain

degree of involvement. Early detection of shoulder girdle weakness is difficult. There appears to be a great variety of shoulder build. In many slender people the scapula may be prominent and many healthy women have horizontal clavicles. Sloping of the shoulders becomes more prominent with age and also the distance between the medial margins of the scapulae varies greatly, depending, among others, upon thoracic build. Testing of individual muscles, as described for instance by Kendall et al. (1971), is often very helpful but is not quite reliable for testing the shoulder fixators in FSHD since these tests depend upon a good function of other shoulder girdle muscles. The shoulder girdle emerges from this picture as a complex structure in which no muscle ever acts on its own. A large number of variables are involved in any position and movement of the scapula, and this is the reason why there is still debate about normal scapular function, let alone the function in pathological states. Therefore, many clinicians rely on functional tests like the ability to slowly elevate the arm to a vertical position, and the ability to hold the arm horizontally against pressure. A slowly lowering of the raised arms is a sensitive test for minimal serratus anterior weakness (Brooke, 1977) demonstrating a light degree of scapula alata in this manoeuvre. If the scapula fixation becomes weaker, the arms cannot be raised completely but are swung up to catch an object that is above shoulder height. If the hands are clasped together, the arms can be raised more easily, a phenomenon repeatedly described, but never properly explained. When scapular fixation and especially the serratus function worsens, elevation of the arm above shoulder level becomes impossible. At attempts at abduction of the arms, the scapulae ride upwards over the back and their upper borders rise high up into the normal location of the trapezius muscles. This phenomenon is said to be typical of FSHD (Brooke, 1977), but an explanation was never offered. A factor that could be important in the genesis of this sign is the fact that the deltoid muscle in FSHD remains strong for a long time, producing a maximum rise of the completely unfixed scapula. The extremity muscles are more accessible for manual testing of individual muscles which will be

so-called prime movers in certain defined circumstances. Tyler and Stephens (1950) noted the brachioradialis muscles to be affected in a very early stage, even before the involvement of the biceps and triceps muscles, a finding not confirmed by others. Although affected later, the biceps and triceps muscles atrophy rather faster, resulting in a remarkable thin upper arm amid relatively spared deltoid and lower arm muscles. In general the forearm muscles retain their strength for a long time. Only in severe cases weakness of the wrist extensors may develop, occasionally leading to a wristdrop. The wrist and finger flexors will maintain good strength much longer. The instrinsic muscles of the hand will only be affected in severe cases (Becker, 1953). Bradley (1979) noticed involvement of these muscles in more than 50% of his cases with more than 20 years duration of the disease. Chyatte et al. (1966) found that the extensors of the neck were always spared but Bradley (1979) observed that these muscles were affected as well in several cases. He even noticed weakness of the neck flexors in as much as 75% of his patients. This contrasts sharply with the experiences of Van Wijngaarden and Bethlem (1973), who found the neck flexors rarely involved in FSHD. They even used this as a criterion for the diagnosis. The sternocleidomastoid muscles may become weak quite early in the course of the disease (Tyler and Stephens, 1950), but they are almost never absent contrary to their early and severe involvement in myotonic dystrophy.

2.7. The truncal muscles

Little has been written about the truncal muscles in FSHD. Tyler and Stephens (1950) noted that the abdominal muscles were involved only after the disease had spread to the foot extensors and glutaeal muscles. Others, on the other hand, (Wintzen, 1979) found the abdominal muscles often affected rather early in the course of the disease resulting in a protruding abdomen. Weakness of the abdominal muscles adds to the pelvic tilt and the increased lumbar lordosis. Weakness of the glutaeus maximus muscles may

play a role as well. Also part of the increased lordosis may be a compensatory mechanism to retain balance while standing or walking.

In more severely affected patients the increased lumbar lordosis can result in an almost horizontal sacrum, and the line of weight bearing from shoulders to feet passes posteriorly to the sacrum. In this form, the increased lumbar lordosis was already described by Landouzy and Dejerine and demonstrated in their case "Leon M." (1885). Duchenne (1868) had suggested that the lumbar hyperlordosis in FSHD was caused by normally functioning erector trunci muscles unopposed in their action by the abdominal muscles. It is not clear if ligamentous or other factors also play a role in producing this extreme lordosis in FSHD, since this has never been studied. Carroll (1979) stated that this lordosis becomes more marked when a patient is bound to a wheelchair, whereas patients with other types of hereditary myopathies tend to become more scoliotic when they are in a wheelchair, but he fails to explain why or to document how often this phenomenon, typical for FSHD, does occur. A thoracic kyphosis is rarely found in FSHD and a scoliosis, if present, is usually very mild, probably because the major symptoms of the disease usually develop after the spinal growth is completed.

2.8. The lower extremities and the pelvic girdle muscles

Weakness of the anterior tibial muscles was mentioned in the earliest descriptions of FSHD (Landouzy and Dejerine, 1885; 1886) and it was the sole finding in the legs in many cases reported by Boyes et al. (1950) but it was not recognised as an early sign until the publication of the extensive family of Tyler and Stephens (1950). Chyatte et al. (1966) and Vignos et al. (1967) found early weakness of the anterior tibial muscles unique and typical for their group of FSHD patients. Seitz (1957) and Erbslöh (1958) paid special attention to this sign and confirmed Tyler's and Stephen's experience, but at the same time Becker (1953), Walton and Nattrass (1954), Chung and Morton (1959) and

Walton and Gardner-Medwin (1974) still found the pelvic girdle and the proximal muscles of the legs the main sites of involvement in the lower part of the body. Kazakov et al. (1974) studied 55 personal cases and 145 cases from literature and found that the disease could spread in two different ways to the lower part of the body. The first type, which they called "the gradually descending variety", spread initially to the pelvic girdle muscles and then gradually to the upper and lower leg muscles. The second type, which they called "the descending type with a jump", first spread to the lower legs, especially the anterior tibial muscles and from there on to the upper legs and pelvic girdle muscles. The second type was said to be more common. These authors stated that within each family only one type occurred and they argued that this homology or clinical similarity within families indicated that FSHD was genetically heterogeneous and consisted of at least two diseases. Carroll (1979) stated that these findings could not be confirmed, but did not mention on what grounds. Walton and Gardner-Medwin (1981) argued that the patients of Kazakov et al.(1974) were not studied up to modern standards and might very well have included cases with neurogenic atrophy. Weakness of the peroneal muscles will develop somewhat later than the anterior tibial weakness, and by the time this is found, weakness of the gluteal, quadriceps and hamstrings muscles will be clinically present as well. In the majority of cases the calf muscles remain unaffected for a long time: they become involved in the latest stages of the disease only (Tyler and Stephens, 1950). The extensor digitorum brevis muscles remain unaffected for a long period and are sometimes found to be hypertrophied (Brooke, 1977) as a compensatory mechanism for an early foot drop. This finding can be helpful in distinguishing FSHD from neurogenic atrophy. The other intrinsic foot muscles were reported unaffected by Tyler and Stephens (1950). These muscles are only involved in cases with diseases of long duration (Bradley, 1979). Weakness of the foot extensors interferes with walking, resulting in a steppage gait and inability to run. Patients tend easily to trip over small objects, falling forward on their knees. If pelvic girdle weakness develops, a waddling

gait will be visible and gradually rising from a chair or climbing stairs becomes more and more difficult.

The waddling steppage gait with the impressive lumbar lordosis, the drooping shoulders and the myopathic face are very characteristic for FSHD. Finally, walking and standing becomes impossible and the patient becomes wheelchair-bound.

2.9. Pseudohypertrophy of muscles

Pseudohypertrophy is not a hallmark of FSHD (Walton and Gardner-Medwin, 1981). Landouzy and Dejerine (1885; 1886) observed pseudohypertrophy in the supraspinatus and infraspinatus muscles of several cases and considered this to be typical of FSHD. Further observations could not confirm this. Becker (1953) observed one case with pseudohypertrophy of the deltoid muscles but most authors mention a seeming hypertrophy as the deltoid muscle remains intact for a long time amid rather atrophic muscles: the same can be said of the calf muscles. Pseudohypertrophy of the glutaei muscles was occasionally observed by Becker (1953) but is was not mentioned by others. True hypertrophy was described in the extensor digitorum brevis muscle by Brooke (1977) as a compensatory mechanism for an early foot drop. This has not been reported before. Histological studies on these muscles were not undertaken.

2.10. Reflexes

The stretch reflexes diminish rather early in the course of the disease and may eventually disappear. This is a common, but ill-explained finding in myopathic disorders. There are no specific studies on the stretch reflexes in FSHD. Pathological reflexes do not occur in FSHD. Sensory and cerebellar functions are invariably intact.

2.11. Contractures

Contractures are said to be very rare in FSHD (Walton and Nattrass, 1954). Exact numbers and sites are not reported. Occasionally ankle contractures are found. If contractures are a prominent sign in a patient, other diagnoses must be considered, as will be discussed in the next chapter.

2.12. Asymmetry of muscle involvement

An important feature of FSHD is a distinct asymmetry of muscle involvement (Carroll, 1979). This can be present in the facial as well as in the shoulder girdle muscles, and in the extremities.

Mingazzini (1912) and Becker (1953) mentioned a case of unilateral involvement. Becker (1953) noted that the right side was more involved than the left one in 30% of his cases, the left side more than the right one in 15%, while in 55% of his cases both sides were more or less equally affected. He was careful not to draw any conclusions from these figures, since the criteria on which asymmetry was decided were rather crude. These criteria were an asymmetric configuration of the shoulder, an asymmetric strength on arm abduction and an asymmetric onset of muscles weakness. If he also included asymmetry of facial or pelvic girdle muscles, very few symmetric cases remained. Becker considered this asymmetry to be a strong argument for environmental influences on the expression of the gene. He did not mention the possibility of a relation with right or left handedness.

2.13. Skeletal deformities

Skeletal deformities are rare in FSHD. Tyler and Stephens (1950) noted a pectus excavatum in most of their severely disabled patients. This was also present in one unaffected individual. These findings have not been confirmed by others. A mild

scoliosis is often found in the more advanced cases but numbers about its frequency are lacking. Occasionally a kyphoscoliosis has been reported. The increased lumbar lordosis may be a result of muscle weakness itself, and a mechanism compensating for a pelvic tilt in order to maintain balance. The increased lordosis is present in most cases where the disease has spread beyond the shoulder region but again, precise figures are not available. The autopsy case described by Landouzy and Lortat Jacob (1909) had a pectus excavatum, severe muscle contractures, and an increased lumbar lordosis attributed to skeletal changes, but an autosomal dominant pattern of inheritance was not apparent in the family of this patient. Foot deformities are no part of FSHD.

2.14. The cardiac muscles in FSHD

Cardiac involvement in FSHD is considered to be rare. There are only few and no recent reports on this subject. The older literature is hampered by an absent or an inadequate classification of the hereditary myopathies. Most studies report only a few cases of FSHD (Rubin and Buchberg, 1952; Weisenfeld and Messinger, 1952). Schott et al. (1955) studied three patients with FSHD and emphasized the absence of electrocardiographic abnormalities. Manning and Cropp (1958) reported ten patients with "adult type muscular dystrophy". Five of them had left axis deviation which was attributed to rheumatoid heart disease in one case and to coronary sclerotic heart disease in another patient. In the remaining three patients, left axis deviation may have reflected cardiomyopathy. The classification of the myopathy in these cases has been disputed (Perloff et al., 1966; 1971). Gailani et al. (1958) reported on a thyroidectomized FSHD patient with a first degree A-V block, a QRS prolongation and a right branch block, who had a slightly reduced cardiac output. The case discussed by Lisan et al. (1959) had P and T wave abnormalities, a radiological cardiomegaly and congestive heart failure at the age of 32. In this case the diagnosis of FSHD is doubtful because of the early and severe involvement of the triceps surae muscle.

Kilburn et al. (1959) made no distinction between the "limb girdle type" and the "FSH type" of muscular dystrophy. Only two of this eight patients had facial weakness and predominantly shoulder girdle weakness as well. Both had thoracic muscle weakness and pulmonary restrictive defects. One of them had a normal ECG and the other had an incomplete right bundle branch block. The four patients reported by Welsh et al. (1963) had no history of cardiac complaints. They all had normal blood pressure and an normal chest X-ray. One female patient had a heart rate of 52 and a six-year old boy a tachycardia of 102. In another patient a left ventricular conduction delay and a left ventricular hypertrophy "were suggested but not all criteria were present to establish a definite diagnosis". Otherwise the ECG's in these patients were normal. Perloff et al. (1966) studied three patients with FSHD. One of them, a 36-year old woman, had both atrial and third heart sounds and an abnormal brachial arterial response to the Valsalva manoeuvre that could be "compatible with occult cardiac failure". Another patient had a slightly elevated wedge pressure. There were no other findings in these patients suggesting cardiomyopathy. There are three reports of persistent atrial paralysis (PAP) associated with FSHD (Bloomfield et al., 1965; Caponetto et al., 1968; Balwin et al., 1973). All three patients were men. Autosomal dominant inheritance could not be demonstrated and photographs of the patients suggested abduction contractures of the shoulder joints. These patients most likely suffered from what has been described as X-linked recessive scapuloperoneal syndrome with cardiomyopathy, in which the extreme rare condition of PAP is know to develop with age. This syndrome will be discussed in the next chapter. Autopsy reports on FSHD patients are rare. Landouzy and Dejerine (1885) could not detect any cardiac abnormality on macroscopical examination. In the case described by Landouzy and Lortat Jacob (1909) the condition of the heart was not discussed. The case reported by Justin-Besanscon et al. (1964) demonstrated tuberculous lesions in the pericard but the myocard was found to be normal. In summary, no specific cardiac complaints and no specific abnormalities concerning cardiac function are known to occur in FSHD.

2.15. Concomitant diseases

Few authors studied the association of FSHD with other diseases. Tyler and Stephens (1950) mentioned thyreotoxicosis in nine of their patients but thought the association fortuitous. Becker (1953) noticed a goitre in nine of the 94 cases under study. The same author found mental retardation to be present in five patients with FSHD. This association has never been confirmed. There were also two cases (a father and a son) with Huntington's chorea in Becker's series; mitral valve disease was present in three patients, and myocarditis and hypertension each in another patient, but these findings could not be related to the muscle disease. Tyler and Stephens (1950) noted hypertension in six patients of which two had suffered a myocardial infarction. Rheumatic fever was also frequently present in their patients but they found no statistically significant difference between the incidence of rheumatic manifestations in FSHD patients and in unaffected persons.

2.16. Abortive cases

Davidenkow (1930) was the first who drew attention to the frequent occurrence of mildly affected cases in FSHD. He stressed the fact that often neither these patients nor their families were aware that they had the disease. Tyler and Stephens (1950) noted absence of symptoms in 24 out of 58 patients (48%). Thirteen patients were 20 years or older of whom four had "minimal involvement" defined as "just detectable on examination". Walton and Nattrass (1954) were very impressed by these mildly affected cases and introduced the term "abortive". They reported five stationary or abortive cases out of 15 studied (33%). Kazakov et al. (1974) reported 22 (11%) asymptomatic cases among 200 cases of FSHD most of which were taken from the literature. The lack of definition of abortive cases makes it difficult

to study the frequency of this phenomenon in the literature. It should be noted that neither Becker (1953) nor Chung and Morton (1959) mentioned abortive cases in their material. The best definition of abortive cases appears to be "without symptoms but found affected on clinical examination". This definition also includes young persons in whom the disease has just started and who will develop complaints later. A definition of abortive cases such as "without symptoms and beyond the mean age of first complaints" probably would be more correct but is unpractical because the mean age of onset of FSHD is not quite established. In this study the first definition will be used. The clinical picture of abortive cases might then include facial weakness and/or slight shoulder girdle weakness with atrophy. On clinical examination in a rare case, minimal foot extensor weakness might be present as well. Although several authors (Davidenkow, 1930) suggest that FSHD runs a milder course in women, there are no data that would indicate that there are more female than male abortive cases.

2.17 The infantile form

If Duchenne's famous case Henri Juliard (1862) suffered from FSHD -which is likely because of the clinical picture and the pattern of heredity in his family- he represented the earliest report of congenital facial weakness in FSHD. This patient was seen by Duchenne at the age of 13 because of shoulder girdle weakness, noticed one year earlier. He was, like his mother reportedly born with facial weakness. When his mother was examined at the age of 30 the disease had not spread beyond the facial muscles. Her mother and her brother both had shoulder girdle weakness and atrophy as well. The first patient of Landouzy and Dejerine (1885) developed facial weakness at the age of three and shoulder girdle weakness when 15 years old: his sister had suffered from facial weakness since the age of four.

Hanson and Rowland (1971) described similar patients. Three unrelated cases were diagnosed as Möbius' syndrome because of

facial weakness found to be present in the first years of life. All these cases passed the motor milestones at normal ages and developed severe muscle weakness in the first years of the second decade. EMG and muscle biopsy supported the diagnosis FSH myopathy. The first patient had a mother with facial weakness and two brothers who were minimally affected. The second patient had a sister with facial weakness but other family members could not be examined. In the third patient, the father and one sibling were not available for examination; the mother and three siblings were unaffected. Autosomal dominant inheritance has not been ruled out and could very well be present in these cases.

Brooke (1977) was the first to describe infantile FSHD as a special form of this disease. He suggested a specific clinical course and mode of inheritance in this presentation of FSHD, but he omitted to give precise numbers and data. It is unclear how many patients he studied, but he reported that facial weakness is noted in the first two years of life in all cases, leading to an early facial paralysis. Weakness of the shoulder girdle and pelvic girdle muscles develop early, and the progression is so fast that according to him, most children are dependent on a wheel chair by the end of the first decade. The expressionless face limits the emotional, non-verbal communication and isolates the child, making it (in Brooke's experience) more depressed than children with other comparable diseases. The most interesting aspect of Brooke's description is the way this infantile form is transmitted. In all cases except one, Brooke observed in one of the parents slight facial weakness as the only sign of the disease. There was no comment on the exception nor on other members of the families of these patients. Brooke suggested a modifying gene to be present in the non - affected parent of these patients, but in view of the limited data such conclusions appear to be rather premature. At present there is no basis to assume that infantile FSHD is a distinct form of FSHD.

2.18 The late onset adult form

In his monograph on neuromuscular disorders, Brooke (1977) described another extreme of the clinical spectrum of FSHD as the late onset adult form of FSHD. This clinical variety involves patients with a lifelong mild facial weakness having a rapid progression at some stage in their life, commonly in middle age, leading to severe shoulder and pelvic girdle weakness within a couple of years. Muscle biopsy may reveal inflammatory changes, but, according to Brooke, they differ from polymyositis. These patients seem not to respond to corticosteroid treatment. The lifelong presence of facial weakness was suspected upon heteroanamnestic information and induced Brooke to consider this presentation a variant of FSHD. In an earlier publication he suggested that these cases were sporadic ones (Dubowitz and Brooke, 1973). In 1977 he did not comment upon the pattern of inheritance in these cases. Also lacking are data regarding family members. Thus the description of this variant is incomplete and vague, as Brooke himself did admit.

2.19. Age of onset

The onset of FSHD has never been observed objectively. The reported age of onset is therefore based on anamnestic data. Such an approach leaves out the abortive cases because they are without complaints. It is also known from family studies that patients with a considerable amount of facial and shoulder girdle weakness and atrophy, may nevertheless be without complaints. Therefore, the true age of onset of the disease may be several years earlier than is indicated by the complaints of patients. Another problem around the age of onset lies in the involvement of the facial muscles. Most patients are not aware of their facial weakness, nor do they appreciate the meaning of signs, like inability to whistle, or inability to close their eyes completely. Occasionally someone else -a doctor, a mother or an attentive family member- has pointed this out to them. In those

cases the onset of the disease is likely to be reported much earlier. Many people with FSHD will tell that they were never able to whistle. This could indicate facial weakness but, on the other hand, they may never have tried to whistle for various reasons, so this symptom is of little help as it has not been properly studied. The reported age of onset reflects more upon the age of awareness of the disease in patients than upon a true beginning of the disease.

The diagnosis of FSHD may be difficult in the early stages of the disease. Facial weakness may go unnoticed even for a trained physician (Walton, 1955). Atrophy and weakness of the scapular fixators may be difficult to diagnose early in the course of the disease, particularly when the patient is young. Tyler and Stephens (1950) and Becker (1953) all claimed that they were unable to diagnose the disease with certainty below the age of seven. On the other hand, facial weakness was found at the age of three in the proband of Landouzy and Dejerine's first description (1885). Hanson and Rowland (1971) reported patients with congenital facial weakness, later developing FSHD. Also Brooke's (1977) cases, reported as the infantile presentation of FSHD, had facial weakness in the first years of life.

Tyler and Stephens (1950) observed in one large pedigree with 58 living patients that the symptoms or signs recognizable by the patient or his family usually developed between the ages of seven and 20 years, the most common age of onset being between 13 and 15 years. Only five persons (9%) were older than 20 years when they first noticed symptoms. Becker (1953) examined 11 families with autosomal dominant (facio)scapulohumeral muscular dystrophy. The age of onset was thought to be between seven and 27 years, with a peak around 15-16 years. There were only four persons (5%) with an onset later than 27 years (29, 31, 39 and 49 respectively). By the age of 21, 85% of all his cases had been diagnosed as such. Walton and Nattrass (1954) found two cases among 15 with the onset at seven and nine years respectively, ten with the onset in the second decade and three with the onset at 22, 26 and 27 years respectively. It was concluded that the age of onset could "vary from infancy untill late in adult life".

Chung and Morton (1959) presented the ages of onset in a diagram (Fig. 2.1.). It shows that 87% of all patients can be diagnosed at the age of 20 and 93% at the age of 30 years. The diagram is also used to estimate the risk for individuals in families with FSHD to become affected under the assumption that all gene carriers will develop detectable signs of the disease at a certain time in their lives. The probability that a child of a patient will carry the abnormal gene is 0.5 in autosomal dominant diseases, and the risk of such a child, that is unaffected at age z, to develop the disease does not exceed the ratio 100 - G(z) : 200 - G(z) in which G(z) is the percentage of gene carriers clinically affected at that age. This risk is probably even lower, because G(z) in this study was based on recollection data and the disease can be diagnosed on clinical examination years before the onset of first symptoms. In addition Chung and Morton noted a significant higher mean age at onset for males (16.8 years) than for females (13.7 years); they suggested that puberty might be a factor in precipitating the onset of the disease. Becker (1953) found that the age of onset, based on anamnestic data, in ten sporadic cases of FSHD ranged from 15 to 32 years, with an average of 22 years. This figure differed from the average age of onset in the group with proven autosomal dominant inheritance. This difference could reflect genetic heterogeneity but could also be the result of the unexpected playing an important role in the late recognition of symptoms.

figure 2.1 Cumulative distribution of age of onset among 95 patients with FSHD (adopted from Chung and Morton,1959)

2.20 The mode of inheritance

An autosomal dominant pattern of inheritance was found by most authors who reported on FSHD (Landouzy and Dejerine, 1885; 1886; Pearson, 1933; Boyes et al., 1950; Tyler and Stephens, 1950; Becker, 1953; Walton and Nattrass, 1954; Walton, 1956; Chung and Morton, 1959; Kazakov et al., 1974). Myopathies with an autosomal recessive mode of inheritance and presenting themselves with shoulder girdle muscle weakness have been described, but are uncommon (Walton and Gardner-Medwin, 1981). In general, these cases are included in the limb- girdle group of muscular dystrophy. A small percentage of these cases appear to develop facial weakness in the course of their disease. Yet, an autosomal recessive myopathy identical to FSHD has been poorly documented. Brown (1951) reported on in-patients but did not study their families. Therefore her report cannot be accepted as an argument for the existence of a recessive form of FSHD. Stevenson (1953) studied nine families with shoulder girdle and facial muscle weakness in Northern Ireland. In one family a father and a daughter were affected: in the other families the patients only occurred in single sibships. Stevenson did not describe clearly which of the supposedly unaffected persons were examined. In some families the parents were not examined and in others it is evident that he could have studied only one of them. Stevenson's conclusion that FSHD is inherited in an autosomal recessive way is unwarranted on the basis of the data presented. Moser et al. (1966) described four patients in two families suggestive of autosomal recessive inheritance. Only one patient had shoulder girdle onset with facial weakness. In the other three patients the disease had started in the lower extremities. All in all, it appears that an autosomal recessive myopathy, clinically identical to FSHD, has never been properly described.

Apparent sex limitation was only mentioned by Walton (1955) who studied a family with seven affected females in two generations. The same author (1981) referred to a report of a family with an autosomal dominant neuromuscular disorder affecting five

women in two generations (Hertrich 1957). The disorder always had started in the shoulder girdle muscles. Only one patient had a questionable facial weakness. Muscle biopsies were not performed. As long as chance factors cannot be excluded, such families are no proof of sex-limited inheritance.

Sporadic cases of a facioscapulohumeral myopathy constitute another problem. A careful examination of the parents and their families is such cases is always warranted, particularly if genetic advice is sought, while one should have to be sure that non-paternity is excluded. But even when the offspring of such a patient is not affected, a new mutation to FSHD cannot be excluded. Becker (1953) suggested that the 11 sporadic cases of his group of descending shoulder girdle myopathy were different from his autosomal dominant group because of a later age at onset. But is not quite clear whether all these cases were sporadic ones, because in several instances the families could not be examined properly, while in other cases there was a history suggestive of more affected persons in the family, and in one case (family 15) the mother of the proband had a paresis of the orbicularis oris muscle. Walton and Nattrass (1954) included sporadic cases in their limb-girdle group, which was shown to be heterogeneous (Chung and Morton, 1959) and in which sporadic cases with autosomal recessive inheritance could be distinguished. Moser et al. (1966) reported three sporadic cases with facioscapulohumeral myopathy of which two had facial onset of the disease; one of these two patients had no children and her parents and only brother were dead: the parents and the two children of the other patient were examined and found to be healthy.

The literature clearly suggests, that the approach of the clinician who tries to attach modes of inheritance to sets of signs leads to more discussion and confusion than that of the geneticist , who describes the signs at a given mode of inheritance. The geneticist's approach avoids an a priori discussion on semantic problems, such as the meaning of the term facioscapulohumeral, and has the advantage that the patterns of inheritance are well defined. As this approach is felt to be more fruitful,

we should like to define FSHD as an autosomal dominant neuromuscular disorder. Moreover it can be concluded that autosomal recessive disorders closly resembling FSHD have not been properly documented; sporadic cases, resembling FSHD, have been described and might be mutants or phenocopies.

2.21. The penetrance

The penetrance of FSHD was always thought to be complete but this was based on the findings in relatively small pedigrees. Only some authors studied large kindreds. Tyler and Stephens (1950) found the ratio of affected versus non-affected sibs in their large kindred close to 1 : 1 (the actual numbers were 130 versus 143). No correction for the probands could have been made, because they were not indicated in this study. Several patients had died, and only 58 living patients had been examined. Still the authors considered these results to be compatible with complete penetrance. Becker (1953) made corrections for the probands and found that in sibships with at least one affected person, 41% of the sibs were affected and that 46% of the sibs of an affected parent were affected themselves. These figures did not differ significantly from the expected 50% and therefore the penetrance was thought to be complete. Similar numbers were reported by Kazakov et al. (1979) who studied 55 personal cases and 145 histories taken from the literature. They found 49% of the children to be affected if one of the parents had FSHD. These authors stated that FSHD occasionally skipped a generation but they did not document this observation. If their statement is based on published reports only, such as the first family of Landouzy and Dejerine (1885), it is of little value because the skipped generation in this family was never examined.

2.22 Sex influence

Since the recognition of muscle disorders, clinicians have been intrigued by the differences between the sexes. This was largely caused by the presence of the X-linked myopathies. But even when these were separated from the other myopathies, the question remained if the X-chromosome or the hormonal or other biochemical differences between males and females had any influence on the onset or the expression of the hereditary muscle diseases. Several authors have discussed this matter when reporting on FSHD. Becker (1953) found more females than males affected but the numbers did not differ significantly from the expected 1 : 1 ratio. Walton (1955) reported on 17 females and five males in four families but considered the information too limited to draw firm conclusions. Most authors agree that men are as frequently affected as women.

Chung and Morton (1959) reported a statistically significant difference in the mean age of onset in males and females. The authors suggested that the onset of puberty might play a role. However these findings have never been confirmed by others.

Several authors like Davidenkow (1930) had the impression that FSHD runs a milder course in females, but only Becker (1953) came with evidence from his own material. Using pelvic girdle involvement as a criterion for the severity of the disease, he found that 80% of the males and 23% of the females in his study were severely affected. The difference in frequency is statistically significant. But, again, nobody so far has confirmed these observations. Bradley (1979) -using his own index of severity- found women to be slightly more severely affected than men, but his material does not consist purely of FSHD.

2.23. Linkage studies

Linkage or association with a known trait or disease has never been observed in FSHD. Tyler and Stephens (1950) did not find linkage of FSHD with the loci of the ABO, MN and RH blood

groups in their large kindred. Chung and Morton (1959) analysed Walton's (1955) limited data on the bloodgroups ABO, RH, MN, P, FY, and JK in more detail but, again, no suggestion for linkage was found.

2.24 Prevalence and incidence

The prevalence of a disease is defined as the frequency of affected individuals in a population at a given time. The prevalence of FSHD reported by different authors is quite variable, suggesting large regional differences, even if one assumes that not all affected persons are ascertained in the regions with the reported low prevalence. Morton and Chung (1959) reported the prevalence of FSHD being 1 per 435.000 in Wisconsin, after correction had been made for an estimated ascertainment probability, and 1 per 179.000 when based on pooled data from several surveys. Becker (1953) reported a prevalence of 1 per 17.000 in South-Baden (Germany), calculated from familial and non-familial cases. If the 11 sporadic cases were excluded, the prevalence of FSHD amounted to 1 per 20.000 approximately. Walton and Nattrass (1954) reported 22 affected persons in a population of approximately 2 million (1 per 91.000). Moser et al. (1966) found two patients with FSHD among the 910.000 inhabitants of the Kanton Bern in Switzerland, i.e.. 1 per 455.000. Prot (1971) reported the prevalence of FSHD in the region of Warsaw (Poland) to be 1 per 250.000 individuals.

There are several definitions of incidence. The incidence might be defined as the frequency of new occurrences of a disease among individuals of a specific population within a certain period of time, or as the frequency of individuals born in a certain population who will become affected. If the latter definition is used, the incidence is always higher than the prevalence because it may take some years for a defective gene to come to expression, and such a gene may lead to an early death. Morton and Chung (1959) made a correction for the ascertainment probability and found the incidence of FSHD in Wisconsin to be 1 per

263.000 individuals born, and for their combined sources as mentioned in section 2.1., 1 per 109.000.

2.25 Fitness

Fitness is defined as the ability to transmit one's genes to the next generation and have them survive in that generation to be passed on to the next. Becker (1953) reported a normal fitness in patients with FSHD, based on the ratio of children of affected and non-affected sibs. Morton and Chung (1959) stressed the biased ascertainment of more fertile persons, and the possible difference in fertility between non-affected sibs and the general population. Using methods which reduce these biases, they estimated the relative fitness coefficient for patients with FSHD to be about 0.741. (Morton et al., 1963). Emery and Walton (1967) reported a normal fitness if affected sibs were compared with unaffected sibs, but Prot (1971) reported a relative fitness coefficient of 0.80 for her patients with FSHD, when compared with healthy sibs.

2.26 Mutation rate

Becker and Lenz (1955, 1956), using the direct method, estimated the mutation rate of FSHD to be $4.7. \times 10^{-6}$ per gene per generation. Assuming a relative fitness coefficient of 0.89 they arrived at a mutation rate of 5.0×10^{-6} by an indirect method. Morton and Chung (1959) found a mutation rate of 5.0×10^{-7} by an indirect estimate and Prot (1971) reported a mutation rate of 3.0×10^{-7} per gene per generation. These large differences are related to the reported regional differences in the prevalence of FSHD, and apart from the problems of complete ascertainment of this rare and relatively mild disease, many sources of error such as illegitimacy, low expressivity, and possibly incomplete penetrance are involved in establishing the correct number of mutations in a population.

2.27 Clinical course and disabilty

There are no longitudinal studies of FSHD. The clinical course of FSHD has been judged from anamnestic data, and is thought to be slowly progressive in most cases, covering many decades (Tyler and Stephens, 1950). Most authors agree that long periods of arrest are not uncommon (Walton and Nattrass, 1954), but occasionally a rapid progression is noted (Brooke, 1977). The time lapse between involvement of the upper part and lower part of the body varies greatly from patient to patient. Exact figures are rarely given. Walton and Nattrass (1954) mentioned a duration of 20-30 years before the disease had spread to the pelvic girdle muscles. In a later text, Walton and Gardner-Medwin (1981) stated that some cases may run a rapid course, while in others long periods of apparent arrest may be noted. In some instances the pelvic girdle muscles will never be involved. Becker (1953) found that if the pelvic girdle becomes affected, this will happen in 38% of the cases within five years and in 62% within 15 years after the onset of the disease.

Kazakov et al. (1974) studied the way the disease could spread to involve the lower part of the body (see 2.8.). "The descending type with a jump" and "the gradually descending type" never occurred within one family and those two types were thought to suggest genetic heterogeneity of FSHD.

Becker (1953) studied the severity of the disease and suggested that the sex and physique had an influence on the course and severity of the disease. He found that women were significantly less severely affected than men, using pelvic girdle weakness as the criterion for severe involvement (see 2.22). When the disease was studied in relation to the physical build, he found that in general the onset of the disease was later and the disease ran a milder course in the pycnic type, while the leptosome type was affected earlier and more severely. The group of the athletic types and the group of the aspecific types had an onset and a course of the disease somewhere in between the two other groups. There were 76% leptosome types and 24% pycnic and pycno-athletic types in the severely affected

group with pelvic girdle weakness, while there were 71% pycnic and pycno-athletic types and 29% leptosome types in the group of mildly and moderately affected persons.

Other factors that might influence the course of the disease are rarely mentioned. Infectious deseases and traumata are believed to have no influence (Tyler and Stephens, 1950; Becker, 1953). Immobilisation for a long time may aggravate muscle weakness. Boyes et al. (1950) suggested that physical strain could aggravate the disease, but Becker (1953) rejected such explanations.

The degree of disability in FSHD at a certain age is dependent on the clinical course of the disease and is therefore extremely variable. There is no current grading of the disability in FSHD in use, nor is there a generally accepted agreement on the grading of the severity of this disease. Pelvic girdle involvement occurred in 56% of Becker's cases (1953), in 45% of Walton's cases (1955), in 59% of Chung and Morton's cases (1959) and in 60% of the cases described by Ricker and Mertens (1968). Their figures included all age groups. Sometimes inability to walk is considered an indication of severe disability. This was noted to occur in three out of 51 men (6%) and in six out of 72 (8%) women in Becker's material. Ricker and Mertens (1968) observed this in two out of 30 patients (7%), and then only in later life. It can be concluded from this limited information that the frequency of serious disease and disability appears higher at older age. Tyler and Stephens (1950) made similar general statements, and most authors agree with their conclusion that FSHD is a relatively benign disease, even if reports about the infantile form of FSHD (Brooke, 1977) are taken into account.

2.28 Therapy

The best way to preserve muscle strength is through normal daily physical activity. Vignos and Watkins (1966) suggested that an active excercise program, particularly in the early stages of FSHD, could increase muscle strength. The degree of improvement

in strength was correlated with the initial strength of the exercised muscles. Prevention of obesity is of great importance since excessive weight gain has adverse effects on the ability to maintain independent ambulation (Vignos, 1979). Contractures should be treated with stretching. There is no information about the results of Achilles' tendon elongation operation in FSHD, probably because such contractures do not occur frequently in this disease. Experiences with patients with Duchenne type of muscular dystrophy suggest that such operations are contraindicated in the ambulatory phase because the contractures recur rapidly; the postoperative immobilisation might result in disuse atrophy, and the mechanism to maintain extension of the knee might become disturbed, resulting in loss of ambulation (Spencer, 1967).

Operations to improve the function of the arm by stabilisation of the shoulder have been designed specifically for FSHD. In many cases abduction and anteflexion of the arms are impaired quite early in the course of the disease because of a severe paresis of the scapular fixators. In patients with relatively strong deltóid muscles, manual fixation of the scapula will show a remarkable improvement of these functions. In these patients surgical fixation of the scapula might be warranted. The optimal position of fixation appears to be at 20 degrees external rotation. Two techniques have been proposed recently: thoracoscapular bony fusion (Bunch, 1973; Copeland and Howard, 1978) and thoracoscapular immobilisation by fastening the scapula to several underlying ribs with fascia (Ketenjian, 1978). With the former technique the patient will be in a shoulder spica for several weeks, while the latter technique has the advantage that early shoulder motion is allowed postoperatively with the arm supported in a sling. All authors claimed excellent results with their techniques.

2.29 Life expectancy and causes of death

As cardiac and respiratory functions are usually spared, the

life expectancy of patients with FSHD does not differ significantly from the average in the general population. (Chung and Morton, 1959; Prot, 1971). The cause of death does not appear to be related to the myopathy (Becker, 1953) but extensive and systematical studies with regard to this problem are lacking. Walton and Gardner-Medwin (1981) remarked that death through respiratory failure may occur but happens rarely.

2.30 Biochemical studies

The number of biochemical studies specifically on FSHD is rather small. A mild creatinuria is often present with FSHD: being a rather non-specific finding in patients with neuromuscular disorders, it has little importance.

Hurwitz et al. (1967) reported a family in which FSHD and aminoaciduria inherited independently as autosomal dominant disorders. There was an increased excretion of lysine, cystine, ornithine and arginine as a result of a renal tubular defect. An increase of urinary excretion of several aminoacids has been reported in other myopathies but these findings were inconsistent and appeared to be non-specific (Pennington, 1981). An increase of creatine kinase (CK) activity in the serum was found to be the most sensitive biochemical characteristic of neuromuscular disorder. The greatest increase of serum CK activity is found in the rapidly evolving myopathies while smaller elevations or even normal values are found in slowly progressive myopathies like FSHD and denervating disorders. Several other intramuscular enzymes including aldolase, SGOT (serum glutamic oxaloacetic transaminase), SGPT (serum glutamic pyruvic transaminase) and LD (lactic dehydrogenase) are elevated in chronic muslce disease but to a smaller extent than CK. Munsat et al. (1972) found an elevation of the serum LD activity in 20% of his patients with FSHD. The serum aldolase activity was elevated in 15% and the SGOT and the SGPT activities were both elevated in 5% of his cases.

Fowler and Pearson (1964) found the serum CK activity only occasionally raised. Munsat et al. (1972) reported an elevation

in 50% of his cases with FSHD but these values were never higher than four times the upper limit of normal. The same range of CK activity was found by Hughes (1971) in 13 out of 19 cases (68%) with FSHD. Bradley (1979) reported the serum CK levels to be above normal in most cases, but his material included patients with a mitochondrial myopathy resembling FSHD. Hughes (1971) observed CK levels to have a tendency to be raised in subjects up to the age of 45-50 years and to have a gradual drop to normal in older age. There was apparently no correlation between the level of CK activity and the severity of the disease. Munsat et al. (1972) found no correlation between the levels of CK activity and the age of the patients or the duration of the disease. Bradley (1979) was the only author who reported a relation between the level of the CK activity and the rate of progression of the disease. Hughes' (1971) hopes that the serum CK activity would serve to distinguish FSHD and neurogenic atrophy came to nothing since similar elevations of CK activity were observed in spinal muscular atrophy, motor neuron disease and other denervating disorders (Munsat et al., 1973), in the same percentage of cases (Williams et al., 1970; Welch et al., 1972) as in FSHD. Therefore the determination of the serum CK activity is of little help to the differential diagnosis of FSHD (Munsat et al., 1973). Walton and Gardner-Medwin (1981) stated the serum enzyme levels are not raised in preclinical cases.

Many studies have been carried out on the serum CK isoenzymes in muscle diseases, but few included FSHD patients. Jockers-Wretou (1976) found the serum CK-MB fraction in one patient to be 7% of the total serum CK activity which was 54 U/l (normal values up to 50 U/l). Elevation of the CK-MB fraction, which should not exceed 6% (Klapdor et al., 1977), is frequently observed in muscular dystrophies, and is felt to reflect skeletal muscle disease rather than cardiac muscle disease (Silverman et al., 1976). Zweig et al. (1980) observed an increased serum CK-MM and CK-BB fraction activity in one patient with FSHD, which they attributed to "leakage of degenerating and regenerating muscle fibres".

Ibrahim et al. (1981) studied serum enzymes and the serum LD

isoenzymes in seven male patients with FSHD. All patients had a mild elevation of the serum CK, aldolase, SGOT and LD activities: also the average serum activity of the fifth LD isoenzyme fraction was significantly raised in these patients.

Elevated serum pyruvate kinase (PK) levels were found in seven out of ten patients with FSHD, all of whom had normal serum CK levels (Alberts and Samaha, 1974). These ten patients showed an average 12-fold elevation of serum PK activity when compared to their controls. Seay et al. (1978) could not confirm these observations: three of their seven patients with FSHD had an elevated serum CK activity and five of them had an elevated serum PK activity. But Zats et al. (1978) found an increased serum PK activity in 18 out of 20 patients with FSHD while only nine had an elevated serum CK activity. Only one patient had normal activities of both enzymes. These authors suggested that the determination of the serum PK activity might be a more sensitive test than the determination of the serum CK activity in some neuromuscular disorders and particularly in FSHD.

Hische and Van Der Helm (1979) studied the serum myoglobin concentrations in 230 patients with neuromuscular diseases of which eight patients had FSHD. In six of these eight patients both CK and myoglobin levels were raised, in one patient both were normal, and in one patient the serum CK activity only was raised. It appeared that the estimation of the serum myoglobin concentration was not a more sensitive test than the determination of the serum CK activity for the detection of patients with FSHD.

Ionasescu et al. (1972) reported on ribosomal protein synthesis in muscle extracts of patients with FSHD. In a previous in vitro study they had found an abnormally large synthesis of collagen by muscle polyribosomes in contact with soluble enzymes derived from the same muscles of patients with Duchenne type of muscular dystrophy. This could not be demonstrated in FSHD but they did find an increased incorporation of labelled aminoacids in the muscle polyribosomes in four patients who were in an early stage of the disease, whereas three patients in advanced stages of the disease showed a lowered, and in one case a normal, incor-

poration of these aminoacids. These findings suggested an increased protein synthesis in muscles in the early stages of FSHD and the authors speculated that this could be the synthesis of a contractile (but possibly inactive) protein, and that the increased protein synthesis thus reflected a failing attempt at regeneration (Ionasescu et al., 1975). This abnormality appeared controlled by an undetermined factor belonging to the soluble (non-ribosomal) fraction of muscle homogenates. (Ionasescu and Zellweger, 1979).

2.31. Electromyography

At present it is impossible to differentiate the clinical varieties of muscular dystrophy from each other by electrodiagnostic methods. The principal value of electromyography (EMG) is to differentiate the myopathies from the neurogenic atrophies with which they may be confused. The EMG abnormalities in the myopathies are explained in general by the loss of individual muscle fibres within a motor unit while the total number of motor units that can be activated remain unchanged. In needle EMG a polyphasic motor unit action potential is observed as a result of non-synchronous firing of remaining muscle fibres. On an average the action potentials of myopathic muscles are of shorter duration than those of healthy muscles. This is explained by the lowered muscle fibre density in the motor units reducing the early and late components of the action potential at first (Buchthal et al., 1960). The voltage of the motor unit action potentials is usually normal or slightly diminished. On maximal effort, a full interference pattern of normal or slightly reduced amplitude is obtained in most instances. In severely affected muscles the disproportion between the degree of weakness and the reduction in the interference pattern provides an argument for a myopathic disorder. Automatic frequency analysis of the interference pattern may reveal a shift to the higher frequencies in the myopathies, but this is of limited diagnostic value as a substantial shift of frequencies is usually accompanied by a

recognisable excess of polyphasic motor unit action potentials.

Most authors use the term "myopathic EMG" when an interference pattern of motor unit potentials of brief duration and small amplitude with an excess (> 12%) of polyphasic potentials is found (Buchthal and Kamieniecka, 1982). Engel (1975) criticized this term since, theoretically, brief small abundant polyphasic potentials (BSAPP) can be present as well in neurogenic disorders. Introduction of new terms like BSAPP-pattern are equally unsatisfactory (Daube, 1978) because the value of the term lies solely in the meaning it carries to the reader, and it does not absolve the electromyographist to describe in detail all the findings of his examination.

Spontaneous activity has been described in cases of muscular dystrophy (Buchthal and Rosenfalck, 1963) and consists of brief discharges of repetitive activity following insertion or movement of the needle electrode and of fibrillation potentials. This spontaneous activity is rather uncommon in muscular dystrophy but it is frequently found in polymyositis. In polymyositis positive sharp waves may be present as well. Munsat et al. (1972) found them in patients with FSHD who had rather extensive cellular infiltrations, histologically resembling polymyositis.

Fasciculations have never been found in FSHD. Motor nerve conduction is said to be normal in FSHD when measured by conventional methods, but Bethlem et al. (1973) reported slowing of the peroneal nerve conduction velocity in two of their seven cases.

Hausmanova-Petrusewicz and Jedrzedowska (1972) demonstrated enlargement of the motor unit territories, large potentials and pseudomyotonic discharges in some of their patients with muscular dystrophy, features normally indicative of neurogenic disorders. In many instances of FSHD, on routine EMG examination McComas (1977) found in some muscles "myopathic" and in other muscles "neuropathic" features in the same patient: or in some members of a family "myopathic" and in other members of the same family "neuropathic" characteristics: but, unfortunately, these findings are not specified.

Sica and McComas (1971) advanced arguments for a neurogenic factor in FSHD. Using a method described earlier, (McComas et al.

1971) they found a reduced number of functioning motor units in the extensor digitorum brevis muscle in three out of four patients with FSHD. The size of the motor unit was normal in all four cases. Isometric twitch studies showed decreased twitch tension in two cases, a prolonged contraction time in four cases and a prolonged relaxation time in three cases. These findings were thought to be compatible with chronic partially denervated muscles. Maximal impulse conduction velocities and terminal latencies in the peroneal nerves were normal. In the discussion of their results, Sica and McComas (1971) treated patients with FSHD and patients with a limb-girdle myopathy as one group, which led them to premature conclusions about FSHD, since their actual studies on those four patients showed only minor abnormalities, often only in a couple of patients. The technique, methods and interpretations have been severely criticized by Panayiotopoulos et al. (1974; 1976) who were unable to reproduce the findings in 50 patients including three patients with FSHD after appropriate modification of the technique (Panayiotopoulos and Scarpalezos, 1977).

Ballantyne and Hansen (1974) used a computerized method to estimate the quantity of motor units and found this within normal range in the extensor digitorum brevis muscles in three cases of FSHD. The number of motor units was reduced only in cases of myotonic dystrophy. The authors thought that Sica and McComas (1971) had arrived at low numbers of motor units because their method failed in diseases where quantitative alteration in the configuration of the motor unit potentials occurred. A computer method was also used for analysis of evoked motor unit potentials (Ballantyne and Hansen, 1975). These potentials were recorded from surface electrodes over the extensor digitorum brevis muscles and evoked by stimulation of the deep peroneal nerve at the ankle. The latencies and duration of the motor unit potentials were significantly increased in cases with FSHD as compared to controls, which is in contrast to the findings of conventional needle electromyography. The fastest motor conduction velocities were significantly reduced and the shortest distal motor latencies were significantly prolonged in patients

with FSHD. These findings seemed to support the hypothesis of a neurogenic factor in FSHD, but Jennekens et al. (1972) demonstrated with muscle biopsies that, from the second decade onwards and increasing with age, neurogenic features such as type grouping and group atrophy were observed in the extensor digitorum brevis muscles of individuals who had not suffered from neuromuscular disorders. These findings were explained as the result of a slow proces of denervation and reinnervation, occurring as part of the normal ageing processes. This study suggested that the extensor digitorum brevis muscle is not quite suitable for EMG studies such as the ones mentioned above.

2.32. Muscle biopsy studies

Muscle biopsy in FSHD occasionally shows no abnormalities; in classical, slowly progressive cases the changes can be minimal. All histological findings traditionally attributed to myopathies can be found in FSHD. Histochemical studies of the muscle biopsies have contributed a great deal to our knowledge of muscle diseases but these studies included only few cases of FSHD (Brooke and Engel, 1966: five patients; Dubowitz and Brooke, 1973: 11 patients; Bethlem et al., 1973: seven patients; Buchthal and Kamieniecka, 1982: 21 patients). Therefore the histopathology in FSHD is not as clearly established as in the Duchenne type of muscular dystrophy (Munsat, 1972). The reason could be that FSHD is a rare disease and that many patients are not interested in extensive studies once the diagnosis is made in a family member and once they know the relatively good prognosis.

First, the organisation of the muscle fibres (i.e. changes in size and distribution) and secondly, the structural changes will be discussed.

Organisation

A very constant finding on histological examination is an increased variation in fibre size with rounding of the fibres. Dubowitz and Brooke (1973) frequently observed an increase of the

mean fibre diameter of all fibre types. Abnormal hypertrophy factors were more often found than abnormal atrophy factors. The same authors noted small angulated fibres scattered between large fibres in 70% of their biopsies. "They were frequently not the heavily stained angulated fibres seen in denervation, but merely normally staining very minute fibres". Buchthal and Kamieniecka (1982) did not observe small angulated fibres in 21 biopsies of patients with FSHD. The significance of small angulated fibres in FSHD is uncertain. A neurogenic lesion cannot be ruled out although most authors (Buchthal and Kamieniecka, 1982) appear to accept only dark angular fibres that stain intensely with the NADH-tetrazolium reductase stain, as a definite proof of denervation in FSHD. Groups of atrophic fibres were not observed by Brooke and Engel (1966) nor by Dubowitz and Brooke (1973) who specifically stated that "this would serve to differentiate from classical denervation". Bethlem (1970) did not mention angulated fibres in relation with FSHD, but later (1977) he stated that small groups of small angular fibres are sometimes present. Hausmanowa-Petrusewicz and Jedrzedowska (1971), and Dastur and Razzak (1973) also reported small groups of atrophic fibres in cases of muscular dystrophy but it was not clear if cases of FSHD were included. If fibre type predominance is present, type 2 predominance is more frequently observed than type 1 predominance. This helps to differentiate FSHD from other myopathies which have a tendency to type 1 predominance (Dubowitz and Brooke, 1973). Engel and Kossman (1963) reported a case of FSHD with selective involvement of type 1fibres.

Structural changes

Hyaline fibres and necrotic fibres with phagocytosis are frequently, but not abundantly, present. They are apparently more prominent in the rapidly progressive cases. Basophilic fibres with vesicular nuclei and prominent nucleoli can be found which are regarded to represent regeneration. Internally located nuclei are present in some biopsies but this is never a prominent feature. Increase of fat and endomysical fibrosis, which can be found in an early phase of the Duchenne type of muscular

dystrophy, is only rarely present in FSHD and never to a great extent (Ionasescu et al., 1972; Dubowitz and Brooke, 1973).

A rather distinct inflammatory reaction is a remarkable and not unusual finding in FSHD (Brooke and Engel, 1966; Munsat et al., 1972; Dubowitz and Brooke, 1973; Bethlem, 1977). This reaction may be so prominent that it resembles polymyositis. Munsat et al. (1972) reported four rather severe cases of FSHD: two showed a clearly autosomal dominant pattern of inheritance in their families, and in the two other cases the family data were inadequate. The perivascular and interstitial inflammatory responses found on histopathological examination were so extensive that they were treated with corticosteroids. Three patients showed a clinical improvement but later reports (Munsat and Bradley, 1977) attest that this improvement was transient and deterioration ensued as in other cases with FSHD. Lowering of serum CK activity was observed during corticosteroid treatment but the authors stressed that this did not imply therapeutic benefit. Munsat et al. (1972) suggested that the imflammatory reactions they observed were only a stage in the development of FSHD.

Papapetropoulos and Bradley (1974) observed inflammatory infiltrations in six patients with different types of muscular dystrophy (three cases of FSHD, three sporadic cases of other types). They suggested that this was an immunological reaction secondary to the underlying muscle degeneration, leading to muscle damage in its own right. A similar explanation was given by Jennekens et al. (1975) for the inflammatory responses they found in the muscle biopsies of five members of their two families with autosomal dominant neurogenic atrophy in a scapulopersoneal distribution, accompanied by a cardiomyopathy at a more advanced age. These two families are rather exceptional indeed as they do not fit properly in any known category. They will be discussed later.

Target fibres and targetoid fibres have never been described in FSHD. Moth-eaten fibres seem to be present in more than half of the cases (Dubowitz and Brooke, 1973). These small fibres are predominantly type 1 fibres, in which the intermyofibrillar net-

work that normally has a very regular pattern, assumes a whorling appearance with areas that do not stain with oxidative enzyme reactions. These fibres appear to be identical to the lobulated fibres described by Bethlem et al. (1973). The authors found that bundles of myofibrils ran an aberrant course in these fibres and that accumulations of normal mitochondria and glycogen were found in between these bundles. The significance of these moth-eaten fibres is unclear as they were observed in other myopathies, in spinal muscular atrophies (Bethlem et al., 1973) and in diseases like Parkinson's disease and polymyalgia rheumatica (Dubowitz and Brooke, 1973). Yet their frequency in FSHD is remarkable: Bethlem et al. (1973) observed moth-eaten fibres in 13 out of 300 biopsies. Seven out of 11 patients with FSHD showed moth-eaten fibres.

Ringed fibres are occasionally discovered in FSHD: their presence suggest a myopathy although they are observed in diseases such as spinal muscular atrophy and rheumatoid arthritis (Dubowitz and Brooke, 1973) and also in normal muscles (Behtlem and Van Wijngaarden, 1963).

Ultrastructural abnormalities characteristic of FHSD have not been reported (Mair and Tomé, 1972; Price and Van De Velde, 1981).

2.33. Summary

FSHD shares with other autosomal dominant disorders such as, for example, Huntington's chorea or myotopnic dystrophy, a confusing history of descriptions of the diseases. After the first report many observations were made, each emphasizing a peculair aspect of the variable clinical picture. This often led to suggestions that different diseases were hidden under one clinical presentation. But autosomal dominant disorders tend to favour the "lumpers" above the "splitters" and, at present, a variable clinical picture appears to be a feature of autosomal dominant disorders. The same applies to FSHD. Still there are some characteristic findings in FSHD:

- The main features of the disease are early weakness and atrophy of the shoulder girdle muscles, in many instances preceded by facial weakness, although, apparently, facial weakness is absent in approximately 20% of the cases.
- There is an early spread of the disease to the muscles of the upper arms and to the foot elevators. The further extension to other muscles is variable.
- Pelvic girdle involvement is usually a late stage in the course of the disease.
- Asymmetry of muscle involvement is very common.
- Pseudohypertrophy of muscles is extremely rare.
- Contractures and skeletal deformities are not common, but exact figures are lacking.
- Cardiac involvement has never been properly described.
- Abortive cases with minimal or mild muscle involvement and without complaints related to muscle weakness are quite common.
- The mode of inheritance is autosomal dominant. Autosomal recessive myopathies, clinically identical to FSHD, have never been sufficiently documented. Sporadic cases with a myopathy identical to FSHD have been described. As long as it cannot be proven or disproven that they are mutants of FSHD, their classification remains an open question.
- The penetrance of the abnormal gene appears to be complete.
- Men and women appear equally frequently affected. There are no solid grounds to assume that either sex is more severely affected than the other.
- Serum CK activitity is mildly elevated in approximately 50% of all cases but is rarely more than four times the upper limit of normal.
- FSHD runs a benign course, leading to a severe disability in only a small percentage of cases. Only a few persons become wheelchair-bound, and if so, mostly at an older age.
- The patients' ages at death do not differ significantly from the average.

Apart from these characteristic findings, there are several aspects of FSHD that lack the quality of constancy.

- The sequence in which individual muscles become affected is quite variable.
- The rate of progression of the disease differs from case to case: in some instances the disease is steadily progressive, in others long periods of arrest are noted. Occasionally a rapid progression within years is observed.
- The age of onset may vary from the first year of life till late in middle life. There are no good grounds to assume that the infantile form of FSHD constitutes a separate entity.
- The prevalence of FSHD in different parts of the world is quite variable, ranging from 1 in 20.000 to 1 in 455.000 individuals in a population.
- EMG mostly shows abnormalities thought to be compatible with myopathic disorders i.e. an interference pattern with brief, small and polyphasic action potentials. Occasionally recordings suggesting a neurogenic lesion have been reported.
- Muscle biopsies often demonstrate mild changes, that are compatible with primary muscle disease. Sometimes inflammatory reactions of an impressive degree are found. In a number of cases small angulated fibres are seen, suggesting a neurogenic factor in FSHD.

Finally three negative remarks are pertinent to the definition of the present state of knowledge of FSHD.

- Factors precipitating the onset of the disease are not known, although physical exertion has been implied to play a role in the development of asymmetric muscle involvement.
- Association or linkage with a specific disease or genetic marker has never been reported.
- The pathogenesis and the cause of this disease are not known.

Chapter 3

The facioscapulohumeral syndrome: differential diagnosis of facioscapulo-humeral disease

3.1. Introduction

Van Wijngaarden and Bethlem (1973) studied several patients in whom facial and shoulder girdle muscle weakness and atrophy, which was called a facioscapulohumeral syndrome (FSHS), were the main features of their disorder. These patients suffered from different neuromuscular diseases. The authors concluded that such a syndrome is not specific for any disease. Yet the use of the term facioscapulohumeral syndrome (FSHS) became en vogue. Some authors used the adjective FSH in the literal sense, denoting the major sites of muscle involvement. Others (Carroll, 1979) confused the issue and used the term FSHS to discuss the differential diagnosis of FSHD, thereby including several disorders that demonstrate so many particular features in addition to facial, scapular and humeral weakness, that FSHD is rarely considered. These disorders with remote resemblance to FSHD will be mentioned briefly below. In the following sections we will discuss only those disorders that may resemble FSHD clinically. Shoulder girdle weakness is essential. Detectable muscular atrophy is expected if a fair degree of weakness is present. Additional weakness of the facial muscles heightens the resemblance to FSHD, but it is not obligatory. As peroneal weakness may lead to presenting symptoms in FSHD, scapuloperoneal (SP) syndromes should be included in the differential diagnosis of FSHD. FSHD presenting with pelvic girdle weakness has not been reported in the large series of Tyler and Stephens (1950) and Becker (1953). Neuromuscular disorders with pelvic girdle onset will not be considered in the differential diagnosis of FSHD.

Patients with myasthenia gravis may exhibit a FSHS in the course of their disease (Van Wijngaarden and Bethlem, 1973), but

the history and physical examination rarely brings FSHD into the differential diagnostic considerations. The two patients of Van Wijngaarden and Bethlem (1973) had extraocular weakness as well, which excludes FSHD. For similar reasons oculopharyngeal myopathy and all other myopathies with extraocular weakness are excluded from the differential diagnosis of FSHD. Möbius' syndrome shows other cranial nerve palsies besides facial weakness and skeletal deformities in most cases (Henderson, 1939; Hanson and Rowland, 1971). Patients with myotonic dystrophy may exhibit a FSH syndrome. Most of these patients have additional features pointing at the proper diagnosis. Serratrice et al. (1969) reported on a patient with phosphofructokinase deficiency, who had a SP syndrome. He had a history of exercise intolerance, but no history of muscle cramps. His deltoid and sternocleidomastoid muscles were quite atrophic. These findings should suggest another diagnosis than FSHD. The muscle biopsy with biochemical and analysis yielded the proper diagnosis. Patients with systemic carnitine deficiency (Karpati et al., 1975; Carroll et al., 1980) and with muscle carnitine deficiency may exhibit a FSH syndrome. Although the clinical presentation may vary considerably, most patients demonstrate additional symptoms and signs that exclude FSHD.

3.2. Scapuloperoneal muscular dystrophy

The question whether scapuloperoneal muscular dystrophy (SPD) exists represents a semantic problem. If SPD is defined as an autosomal dominantly inheriting primary myopathy with involvement of the shoulder girdle and foot extensor muscles, but without facial weakness in any patient of the family (Rowland, 1977), then SPD has never been properly described as will be demonstrated below. If one accepts, however, that the definition of SPD may include occasional involvement of the facial muscles, it is obvious that there is no clear distinction between FSHD and SPD, since facial weakness is absent in approximately 20% of the affected cases in families with FSHD and foot extensor weakness

frequently is an early finding. It is probable that the seeming distinction between the two conditions could arise when the adjective facioscapulohumeral was taken literally as the main sites of muscle involvement.

The adjective scapuloperoneal (SP) was coined by Davidenkow (1926) to describe a syndrome that apparently occurred in Russia only at that time, but has never been observed since. SP amyotrophy (Davidenkow, 1939) was said to be an autosomal dominant disorder with muscular weakness in a SP distribution and sensory disturbances located distally in the extremities. After a long discussion, and in spite of the absence of post-mortem studies, this syndrome was thought to constitute a separate nosological entity standing between FSHD and peroneal muscular atrophy. Davidenkow's syndrome, as it was called, will be discussed in detail in section 3.6..

Seitz (1957) described a 48-year old Turkish male who developed a slowly progressive shoulder girdle weakness since the age of 30. By the 45th year the foot extensors became involved. Sensory examination was normal. His family was said to be healthy but was not examined. EMG and the muscle biopsy findings were compatible with a myopathy. Seitz reviewed the literature on this syndrome and rejected the - sometimes discrete - sensory disturbances in Davidenkow's cases as criteria for a nosological classification because of the subjective nature of the sensory examination. He concluded that Davidenkow's cases must have been myopathic disorders like his own case, and so the term SP muscular dystrophy was born. His conclusion elicited a chain of confused and confusing reactions. Some of the confusion can be clarified if the chronological sequence of the articles can be abandoned. Therefore, the reports on cases with autosomal dominant inheritance will be discussed first and then those on sporadic cases.

Serratrice et al. (1979) described 14 cases with SP myopathy. Seven patients had an onset of symptoms in the shoulder girdle muscles, seven in the foot extensors. Two of the four sporadic cases and six of the ten hereditary cases had facial involvement. Only in one family the facial muscles were spared in

all cases (a father and a daughter); the other family members were not commented upon. This study lacked family examination anyway. It is the more amazing that they reached the same conclusion as Ricker and Mertens did one year earlier (1968) namely, that a SP syndrome might be a stage in the development of FSHD.

A similar conclusion was drawn by Kazakow et al. (1975) about the famous family K. This family was reported initially by Oransky in 1927. All members had shoulder girdle weakness and the four affected persons that were examined all had foot extensor weakness. Three of them had facial involvement as well. Conventional electro-diagnostic examination favoured a myopathy. The pattern of inheritance was clearly autosomal dominant. Oransky (1927) could not classify this syndrome. He thought it an unusual combination of what he called "the proximal scapulo-humeral or Erb's type" and "the distal or Naville's type of muscular dystrophy". It is not clear whether he was aware of Landouzy and Dejerine's publications. In any case, he did not mention them. This family was also examined by Davidenkow (1939) who found a discrete sensory loss in two cases. Kazakow et al. (1975) reexamined this family and found no sensory abnormalities, normal peripheral nerve conduction velocities, and a myopathic pattern on EMG examination. In his opinion this family suffered from FHSD.

Thomas et al. (1975) reported six patients. In all instances the disease started in the foot extensors. Its myopathic nature was suggested on EMG examination and muscle biopsy. In two cases (mother and daughter), autosomal dominant inheritance was likely. The age of onset was 18 years. Both patients lacked facial weakness or cardiac abnormalities. In two other cases there was a suggestion of heredity based on anamnestic data, while two other cases seemed to be sporadic. The age of onset in those four cases varied from 28 to 57 years. One of them had facial weakness: three of them (40, 48 and 57 years old) had cardiac abnormalities that could have been caused by ischaemia or by cardiomyopathy. Unfortunately, this important distinction could not be made on the available data. As the family data also were inadequate, this

report was not very helpful in the discussion on SPD.

The patients reported by Münzer (1927), Seitz (1957), Hausmanova-Petrusewicz and Zielinska (1962), Lovelace and Menken (1969), and by Steidl and Urbanek (1971) were all considered sporadic cases, but in no instance were the families examined. In the case of Delwaide and Schoenen (1976), two brothers and two nephews were found to be healthy but the parents could not be examined. Accordingly, by lack of adequate family examination, the existence of sporadic SPD is still an open question.

Still it is amazing how much attention is paid to unanswered questions. Brooke (1977) mitigates the fact that a separate section of his book is devoted to SPD by the statement that "in approximately one half of the patients there is also associated facial weakness and in this instance the differential diagnosis (with FSHD) may not only be difficult but irrelevant". The recognition of a SP syndrome "lies only in the fact that other illnesses may mimic SPD". Since one half of the patients have facial weakness it seems that the term FSH syndrome would do equally well. Bethlem (1977) appears rather non-committal about autosomal dominant SP myopathy. He wrote that "some authors consider this myopathy a variant of FSHD". He stated that muscle biopsy may show moth-eaten or lobulated fibres, a fact never reported before and given without reference. Whatever his opinion, this comment demonstrates once more that there is no distinction between FSHD and SPD.

The inference seems fairly well justified that the case for autosomal dominant or sporadic SPD as a clinical entity does not rest on solid evidence in as much as a proper clinical and genetic description has failed to be brought forward.

3.3. Congenital myopathies

There are several congenital neuromuscular disorders that may present with a FSH syndrome. Because congenital or infantile FSHD appears to start with facial diplegia, only Möbius' syndrome seems to be a serious candidate in the differential diagnosis.

Both disorders do not present with hypotonia (Hanson and Rowland, 1971). Möbius' syndrome is characterized by external rectus weakness in most cases, is not progressive, and is sometimes accompanied by skeletal deformities such as clubfeet or extra digits. Congenital or infantile FSHD is a progressive disorder, without extraocular muscle weakness and with a positive family history in most cases.

Patients with congenital myotonic dystrophy display facial diplegia but the generalized hypotonia, the examination of the mother and her family, the laboratory findings, and the clinical course did rule out FSHD in most cases so far (Harper, 1979).

Since Van Wijngaarden en Bethlem (1973) described patients with myotubular myopathy, central core disease, and nemaline myopathy under the heading of FSH syndrome of early onset, these conditions appear regularly on the list of differential diagnosis to FSHD (Carroll, 1979). This is why they will be discussed, although in most patients with these disorders there are ample findings, additional to facial and scapular weakness, to exclude the diagnosis FSHD. The three disorders mentioned above are often included in a larger group of diseases arbitrarily called "congenital myopathies". These congenital myopathies share a particular abnormality on histological, histochemical and ultrastructural examination of muscle biopsies. This group probably represents heterogeneous diseases and the specifity of the various morphological abnormalities is doubted (Brooke, 1977; Bethlem et al., 1978). The pathogenetic mechanisms which produce the lesions are unknown. Attempts have been made to outline some kind of general picture for this group of diseases (Bethlem, 1977) but, apart from hypotonia after birth ("floppy infants") with delayed motor milestones and type 1 fibre predominance in many cases, most other presumed features have too many exceptions. Still, congenital skeletal abnormalities should raise the clinician's suspicion with respect to this group of diseases. Since myotubular myopathy, central core disease, and nemaline myopathy are most consistently mentioned in relation with the FSH syndrome, they will be discussed in more detail.

Most cases of myotubular or centronuclear myopathy presented

as floppy infants. Sometimes the onset of the disease was later in childhood and occasionally in adult life (Goulon et al., 1976). Autosomal dominant (Mc Leod et al., 1972), autosomal recessive and X-linked recessive modes of inheritance were suggested (Van Wijngaarden et al., 1969). Muscular weakness was mainly proximal. Ptosis, extraocular muscle weakness and facial weakness were present in about half the cases (Bethlem, 1977). Extraocular weakness rules out FSHD. In the rare cases when facial and scapular weakness are the main features of the clinical picture, the findings on muscle biopsy will differentiate this disorder from FSHD. These findings include myotube-like fibres, increased amount of internal nuclei, type 1 predominance and, occasionally type 1 atrophy.

Central core disease was first described by Shy and Magee (1956) as a congenital autosomal dominant non-progressive myopathy. Autosomal recessive (Dubowitz and Platts, 1965) and sporadic cases have been reported subsequently (Bethlem and Posthumus Meyjes, 1960; W.K. Engel et al., 1961; Bethlem et al., 1971; Morgan-Hughes et al., 1973). The main clinical features include congenital hypotonia, delayed motor milestones, and a mild non-progressive weakness affecting mainly the proximal muscles, the legs being more involved than the arms. Occasionally, mild weakness of the fae and neck is present leading to the designation FSH syndrome. However, skeletal deformities are not uncommon, giving clues to the proper diagnosis (Telerman-Toppet et al., 1973). In most cases, type 1 fibre predominance is found. The condition is named after the cores that are almost exclusively present in type 1 fibres.

Although central core disease is a non-progressive condition in most cases, Bethlem et al. (1971) described an eight-year old boy with a progressive weakness since his first year of life leading to a severe FSH syndrome with almost complete facial diplegia and protrusion of the lips. In the muscle biopsy, cores were present in approximately 10% of the type 1 fibres. Bethlem et al. (1966) also reported cores in a familial non-progressive myopathy with muscle cramps after exercise. Therefore, he preferred (1977; 1978) to make a distinction between central core

disease and diseases with cores. Since the origin and the significance of the cores are unclear, it is uncertain how many different diseases are included under the heading central core disease.

The term nemaline or rod myopathy denotes a congenital myopathy with rod-like structures in the muscle fibres (Shy et al., 1963). The patients present with generalized hypotonia after birth, delayed motor milestones and muscular weakness of the trunk, the shoulders, and the pelvic girdle. Facial and bulbar weakness is often present leading to difficulties in swallowing and sucking and, occasionally, to respiratory dysfunction. Skeletal abnormalities, such as an elongated face, a high arched palate, prognatism and kyphoscoliosis are present in a considerable number of cases. All these features render a diagnosis of FSHD unlikely. In most instances the disorder is non-progressive. Occasionally a severe course may lead to death from respiratory complications. Many reports concerned sporadic cases, but autosomal dominant and autosomal recessive modes of inheritance have been described (Arts, 1976; Arts et al, 1978).

Of particular interest to the subject under study is a condition that has been described as late onset rod disease (W.K. Engel and Resnick, 1966). In most instances the proximal muscles were more involved that the distal ones, but Brooke (1977) emphasized the clinical presentation as a scapuloperoneal syndrome, with foot drop as an early sign. He did not comment on the facial and bulbar muscles. As the pathogenesis of rods is uncertain and rods have been described in many other non-neuromuscular conditions, the nosological place of late onset rod disease and its relation with nemaline myopathy remains obscure.

In summary, the presentation of the congenital myopathies apparently rarely raises diagnostic suspicion with respect to FSHD, as this has never been reported. In those cases where facial and shoulder girdle weakness are the main clinical findings, additional features often point to the correct diagnosis and the muscle biopsy findings will be decisive.

3.4. Polymyositis

Polymyositis is a non-hereditary myopathy of unknown cause with a non-infective inflammatory reaction found in biopsied muscles. The disorder may run an acute, subacute, or chronic course with a varying degree of severity. The problem of the classification of the inflammatory myopathies and the etiology and pathogenesis of polymyositis and dermatomyositis will not be discussed. Bohan and Peter (1975), in their excellent review on this subject, used four criteria for the diagnosis polymyositis. They included the clinical picture, the serum muscle enzyme activities, the EMG findings, and the muscle pathology. The diagnosis was considered definite if those four criteria were met, probable if three, and possible if two criteria were present.

Clinical picture

As an initial symptom, muscle pain or tenderness is present in 58% of all cases (Barwick and Walton, 1963). Muscle weakness is mostly symmetrical and involves the proximal limb and the girdle muscles in 98% of the cases; the neck flexors and pharyngeal muscles are affected in approximately two-thirds of the patients (Pearson, 1966). In more advanced cases (one third of all), the distal muscles of the extremities are affected but this is rarely the main site of weakness (Walton and Adams, 1958). Involvement of the extraocular muscles is extremely rare. Facial weakness is reported to develop on the course of the disease in 11% of the cases (Barwick and Walton, 1963), but facial weakness is rarely an initial sign. This may be the reason why very few cases of polymyositis have been reported under the heading FSH syndrome. In fact, the interest in polymyositis, with regard to the differential diagnosis of FSHD, was only raised when muscle biopsies of some cases of FSHD demonstrated extensive inflammatory changes (Munsat et al., 1972). A rapid course of weeks or months, dysphagia, early involvement of the neck flexors, and a negative family history, are more compatible with polymyositis than with FSHD. Muscle pains play no decisive role

as they might occur in both conditions. Only in a few subacute or chronic cases one might find no clues pointing to the proper diagnosis (Brooke, 1977).

Serum muscle enzymes

Serum creatine kinase (CK) activity is raised in 64% of the cases at the time of presentation (De Vere and Bradley, 1975) and is the most useful enzyme to test. The degree of elevation does not correlate with the degree of weakness and disability. The raised CK activity is an indication for the activity of the disease although the CK activitity may be within normal limits in patients with a clinical exacerbation of the disease (Brooke, 1977). Since serum CK levels in FSHD are normal or only slightly raised, one might encounter numerous circumstances in which determination of serum CK activity is not helpful for the differential diagnosis.

EMG

EMG examination in polymositis may reveal increased insertional activity and abnormal spontaneous activity such as fibrillations, positive sharp waves and bizarre high-frequency discharges (pseudomyotonic discharges) (Mechler, 1974). The motor unit action potentials are often short, small, and polyphasic. If this complete picture is present, it renders a strong argument for the diagnosis polymyositis. But in those cases where spontaneous activity cannot be found, FSHD appears equally possible.

Muscle biopsy

The muscle biopsy in polymyositis may show atrophy of both fibre types. Perifascicular atrophy in particular suggests dermatomyositis, and is thought to reflect ischaemic changes secondary to vasculitis. An increased number of fibres with internal nuclei is noted, and structural changes such as necrotic fibres with phagocytosis, and basophilic fibres with vesicular nuclei and prominent nucleoli are often found. Vacuolar

degeneration is frequently observed resulting in a practically non-staining fibre in routine stains, such as the haematoxilin and eosin stain and Gomori's trichrome stain. This is thought to be rather characteristic for polymyositis and may be observed in 50% of the biopsies (Dubowitz and Brooke, 1973). Moth-eaten fibres are present in approximately 45% of the cases. An increase in endomysial and, later, perimysial connective tissue is frequently (35%) noted. Approximately 70% of the cases demonstrate some degree of interstitial or perivascular mononuclear infiltrations (Dubowitz and Brooke, 1973). Most authors find the inflammatory infiltration or the perifascicular atrophy requisite to the histopathological diagnosis. DeVere and Bradley, (1975) found the full range of these specific pathological abnormalities in 46% of their cases only. Pearson (1966) reported the muscle biopsy to be without abnormalities in 10-15% of his cases.

The rather extensive inflammatory infiltrations that have been described in patients with FSHD (Munsat et al., 1972) might raise a serious problem for the differential diagnosis. Munsat suggested that these infiltrations occurred mainly in the initial stages of FSHD, but this has never been substantiated. Papapetropoulos and Bradley (1974) extended the discussion to the infiltrations sometimes noted in other forms of hereditary myopathy and suggested that the inflammatory infiltrations could reflect a secondary immunological reaction to the underlying muscle degeneration (Currie, 1970, 1971; Caspary et al., 1971). Treatment with prednisone did not influence the clinical course in these cases (Munsat and Bradley, 1977). Therefore, a positive response to corticosteroids is suggested by some authors as another criterion to the diagnosis of polymyositis.

Dubowitz and Brooke (1973) stated that fibre hypertrophy never was present in cases of polymyositis and suggested that this finding, when present, could differentiate FSHD from polymyositis. Munsat et al., (1972) did not comment on fibre hypertrophy in their cases. Schimrigk (1974), who did note fibre hypertrophy in his case, might have used this finding as an argument to arrive at a diagnosis. He reported a 36-year old

woman with a FSH syndrome, probably of longer duration, who complained of a tight, painful feeling in the muscles of her calfs. These muscles were not weak. EMG was not reported. Because a triceps surae biopsy demonstrated widespread inflammatory infiltrations, fibrosis, fibre necrosis, and a varying fibre diameter with hypertrophic fibres, the diagnosis FSHD was not made, even though the family history suggested a hereditary condition.

A similar problem arose in the case described by Bates et al. (1973). This concerned a 62-year old man with a two year history of progressive weakness in the legs, followed by weakness and atrophy of the hands and the shoulder girdle muscles. The patient denied muscle pains and dysphagia. On clinical examination, he also had weakness of the neck flexors. His lower facial muscles were affected, but his family denied any change in facial expression since his childhood. There was no family history of neuromuscular diseases. His relatives were not examined.

Serum CK activity was markedly raised. EMG showed short, small polyphasic motor unit action potentials and fibrillations on the left deltoid muscle. The motor nerve conduction velocities in the left forearm were normal. Biopsy of the right deltoid muscle revealed a marked variation in fibre size, with numerous atrophic but also a few hypertrophic fibres. Some of the atrophic fibres were arranged in small groups, but most of them were randomly distributed. Foci of necrosis, phagocytosis and regeneration were prominent, and there was significant endomysial fibrosis. Several foci of interstitial and perivascular infiltration were noted. The condition in this patient was diagnosed as polymyositis and he was started on prednisone. This resulted in a significant subjective and objective improvement.

This patient, with a possibly lifelong weakness of the lower facial muscles, fits well in the tentative category of FSHD with late onset, as outlined by Brooke (1977). These patients are said to have significant inflammatory changes in their muscle biopsies, but they do not do so well on corticosteroides. Examination of the family might have given the answer.

Although polymyositis, presenting with a FSH syndrome, appears to be a rare occurrence, the 11-year old girl reported by Rothstein et al. (1970; 1971) qualifies for this diagnosis. In a couple of days she developed muscle pains and tenderness with weakness of the facial, shoulder girdle, and upper arm muscles. The raised serum CK activity (eight times the upper limit of normal), the EMG findings, and the muscle biopsy were all compatible with the diagnosis of polymyositis. Hypertrophic fibres were not reported. Examination of the parents and three siblings was normal. On prednisone, 70 mg. daily, only a slight improvement of muscle strength was noted.

The cases reported by Cumming et al. (1977) demonstrated a localized nodular myositis. They subsequently developed a more classical picture of polymyositis, as in the case reported by Heffner and Barron (1981). The liberal use of the term FSH syndrome for cases with dysphagia and dysarthria will never pose a problem of differential diagnosis with respect to FSHD.

In conclusion, one may confidently infer that polymyositis presenting with a FSH syndrome is extremely rare. The clinical course and the laboratory findings lead to the proper diagnosis in most cases. On the other hand, small mononuclear infiltrations are rather non-specific findings in neuromuscular disorders, and can be quite extensive in FSHD. Examination of family members is helpful in many, and is essential in chronic cases. Hypertrophy of fibres in the muscle biopsy might argue against the diagnosis of polymyositis.

3.5. Myopathies with abnormal mitochondria

Myopathies with abnormal mitochondria (or mitochondrial myopathies) constitute a widely variable group of diseases, having in common that the mitochondria in the muscle fibres are abnormal in number, size, shape and/or function. The morphological abnormalities are studied by electron microscopy but abnormal mitochondria can be suspected at light microscopy if so-called "ragged red fibres" are present in the modified

trichrome stain, or if an excessive reaction or an abnormal distribution is found with the oxidative enzyme stains. In many cases there is an intracellular accumulation of lipids. The morphological abnormalities of the mitochondria appear non-specific as they are found in many other and unrelated neuromuscular disorders as well. Moreover, abnormal mitochondria may also be present in disorders that involve other organ systems besides muscles, like Kearns-Shy syndrome or ophthalmoplegia plus (Kearns and Sayre, 1958; Shy et al., 1967; Drachman, 1968), Alpers syndrome or progressive infantile poliodystrophy (Shapira et al., 1975) and others (Bradley et al., 1978).

Most cases of the mitochondrial myopathies were sporadic, but all modes of inheritance have been described. Variations in ages of onset have been reported and all kinds of clinical presentation have been observed, including the FSH syndrome. In many instances additional features were present, like salt craving, excessive fatigability, growth retardation, nerve deafness, lactic acidosis, loosely coupled stated of oxidative phosphorylation or hypermetabolism of non-thyroid origin. Many of these findings are believed to be secondary phenomena. More needs to be known about the function and pathology of mitochondria before a useful attempt at classification can be made. Awaiting this knowledge, we will mention some of the reports of cases that presented as FSH syndromes.

In 1967 Van Wijngaarden et al. described a 15-year old boy with a progressive limb-girdle syndrome, who was found to have a subsarcolemmal accumulation of pathological mitochondria. Biochemical analysis demonstrated a loosely coupled state of oxidative phosphorylation. This patient subsequently developed facial and extraocular weakness. Van Wijngaarden and Bethlem (1973) included this patient in their discussion of the FSH syndrome. As extraocular weakness is no part of FSHD, this diagnosis will not be considered in such cases.

D'Agostino et al. (1968) described two sisters with diffuse progressive muscular weakness and growth retardation who were found to have enlarged and abundant muscle mitochondria. The second patient had "a rather expressionless face", suggesting

mild bilateral facial weakness.

The 13-year old patient described by Spiro et al. (1970) had a congenital non-progressive myopathy, with weakness of the proximal limb muscles, and slight weakness of the facial and sternocleidomastoid muscles. A remarkable feature was his craving for salt. There was no history of periodic paralysis. Stains for lipids and oxidative enzyme activity were uniformly increased and did not permit fibre type differentiation. The mitochondria were morphological normal but their numbers were increased. Studied in vitro they showed loose coupling of oxidative phosphorylation.

The family described by Hudgson et al. (1972) was quite remarkable in that the clinical features of the myopathy in this family were very similar to FSHD. The disorder inherited in an autosomal dominant way affecting males and females, but apparently was transmitted only from mothers to children. The penetrance of the condition was high. The expression was quite variable. Four patients with a normal physical examination had an elevation of the serum CK activity. One of them was found to have the same pathological and biochemical abnormalities in a muscle biopsy as his clinically affected relatives. Therefore, these four patients were considered to be affected subclinically. Seven members of this family were found to be affected on physical examination. The ages at onset varied from six to 50 years. At the time of examination the duration of the disease ranged from six to 19 years. In two cases weakness was noted initially in the shoulder girdle, and in the pelvic girdle in four cases. In the proband's case, the mode of onset could not be decided. Six patients had both pelvic and shoulder girdle weakness, and one patient had only slight weakness of the hipflexors. Four patients had facial muscle weakness. In addition, the proband demonstrated slight wasting of the tongue with dysarthria and wasting of the temporal and masseter muscles. There was another patient who had dysarthria but no facial weakness. Five out of six patients, with upper limb involvement, had sternocleidomastoid muscle weakness and two of them also had weakness of the anterior neck muscles, a feature Van Wijngaarden en Bethlem (1973) thought to be less compatible with FSHD. Also the other features, such as onset in

the pelvic girdle muscles, involvement of the temporal, masseter and lingual muscles and dysarthria, strongly suggest a diagnosis other than FSHD.

The serum CK activity was elevated in five clinically affected patients ranging from 69 to 426 IU/L (normal up to 60 IU/L). Taurine excretion in the urine was elevated in three clinically affected and in one subclinically affected patient. Taurinuria was also found in the two cases described by D'Agostino et al. (1968), and mentioned earlier in this section. Although muscle is the main source of taurine, and taurine excretion rises in acute muscle damage, the relation between the taurinuria and this myopathy remained obscure.

EMG was performed in four cases, showing a myopathic pattern in all muscles examined. In one of these cases spontaneous fibrillations and positive sharp waves were found in the extensor digitorum brevis muscle. The motor nerve conduction velocities were all normal.

Muscle biopsies were performed in two affected patients and in one man who only had an elevated serum CK activity. The pathological changes were the same in all biopsies, although less pronounced in the asymptomatic patient. The biopsies demonstrated a considerable amount of necrotic fibres, a moderate degree of fibrosis and infiltration of the fascicles with fat cells. A number of large capillaries were present in the areas of regeneration. Throughout the biopsy, many fibres demonstrated an excessive amount of lipid and an increased oxidative enzyme activity. Both fibre types were involved.

Ultrastructural studies revealed many giant mitochondria, often with concentric cristae and small electron-dense inclusions, and sometimes with paracristalline inclusions. Some small fibres showed abundant and bizarre mitochondria with morphological peculiarities like myelin figures and autophagic vacuoles. Many more normal looking fibres contained an excess of small lipid droplets or large areas of glycogen granules. A remarkable finding was the large number of capillaries in the affected fibres. A liver biopsy obtained from the propositus showed no structural abnormalities of the mitochondria.

Biochemical studies of isolated muscle mitochondria revealed a loosely coupled state of oxidative phosphorylation (Worsfold et al., 1973). In addition, there was a greatly increased amount of muscle lipid, mainly triglycerides.

Bradley et al. reported later (1978) on one female patient of this family who had died due to a viral pneumonia and cerebral venous thrombosis, during which she developed gross lactic acidaemia. Post-mortem examination showed that the mitochondrial morphological abnormality was restricted to the skeletal muscle. Another male of this family, who also had the mitochondrial myopathy, developed a cerebellar syndrome. His mother, who had been affected and had died since Hudgson's et al. (1972) report, had suffered from a transient cerebellar syndrome for several years, of which only a slight dysarthria had remained at the time of examination. In addition, the skeletal muscle carnitine level had been investigated in the proband and was found to be normal.

The pathological and biochemical abnormalities render the condition in this family distinct from FSHD. Especially when the family is taken as a whole, the clinical picture is different as well, although in a more subtle way.

One may conclude that mitochondrial myopathies may occasionally present as a FSH syndrome. Careful clinical examination will make FSHD less likely. Additional laboratory investigations will lead to the proper diagnosis.

3.6. Scapuloperoneal muscular atrophy with sensory disturbances (Davidenkow's syndrome)

In 1939 Davidenkow published the data on one sporadic and 26 familial cases of a condition he named scapuloperoneal (SP) amyotrophy. He made 13 personal observations in five families and included in his study the large family previously described by Oransky in 1927. The disorder was said to be autosomal dominantly inherited, and to begin between the age of 17 and 20 years in most cases. In some patients the age at onset was as late as 45 years. Men and women were equally affected. The clinical

expression of the disease was quite variable; abortive cases were not uncommon. The muscle weakness could start in the upper or in the lower extremities, or become manifest in both simultaneously. In fully developed cases the pectoralis, trapezius, rhomboidei and serratus anterior muscles were affected bilaterally, with sparing of the deltoid and levator scapulae muscles. The muscles of the upper arms became involved much later in the course of the disease and weakness of the hands and fingers was only occasionally observed. The facial muscles often participated in the process, although this remained limited to an asymmetric involvement of the orbicularis oris muscle in most cases. In the legs the foot extensor and peroneal muscles usually were affected, while the foot flexors and supinator muscles frequently were weak as well, but to a lesser degree. In the majority of the cases the atrophy did not extend in a proximal direction and the muscles of the pelvic girdle remained intact. Pseudohypertrophy of muscles was not observed. So far, the description of the clinical picture is identical to FSHD.

Fasciculations were present in two patients (the father and his daughter of family "Su"). Pes cavus, although minimal,was frequently found. Sensory disturbances were absent and consisted of hypaesthesia and hypalgesia with a distal distribution in the limbs. Complaints of pain and paraesthesias were rare. The vibration and position senses were intact in most cases. Occasionally, perioral hypaesthesia was found. Electrical examination of the affected muscles demonstrated a partial reaction of degeneration. Muscle biopsies were not performed.
The nosological place of this syndrome has been disputed extensively. In 1927 Davidenkow thought SP amyotrophy to be a variety of Charcot-Marie-Tooth disease or peroneal muscular atrophy (PMA). In a subsequent article (1939), he noted that the pattern of the muscular atrophy resembled the distribution in FSHD but that, on the other hand, he had never observed a SP syndrome in all the families with PMA he knew. This last observation was later confirmed by Ricker et al. (1968) and by Dyck and Lambert (1968). In 1939 the nosological place of SP amyotrophy remained undecided. In 1954, still lacking

pathological studies, Davidenkow wrote: "the so-called scapuloperoneal amyotrophy occupies a place exactly between the neurogenic (peroneal) amyoptrophy and the facioscapulohumeral myopathy". Confirmation of this syndrome by others is still needed. A similar condition has not been reported since. In a few sentences in an earlier report, Eisenlohr (1889) mentioned a family that might have fitted Davidenkow's description, but the details were scanty.

There are a few reports about similar conditions that were apparently not inherited in an autosomal dominant way. The sporadic case reported by Meadows and Marsden (1969) was a 21-year old girl with progressive muscular weakness and atrophy located distally in all extremities since she was eight years of age. Subsequently she developed bilateral infraspinatus weakness. The term SP syndrome is hard to justify in this case, because the shoulder girdle muscles were certainly not one of the main sites of muscle weakness. Sensory abnormalities were absent. EMG revealed neuropathic features, and the motor nerve conduction velocities became progressively slower in the course of the disease. Muscle biopsy did not show specific abnormalities, with the exception of loss of fibres from intramuscular nerve bundles and degenerative changes in some terminal nerve fibres, suggesting denervation. The initial diagnosis, spinal muscular atrophy (SMA), was changed to PMA because of the slowing of the motor nerve conduction velocities. The authors suggested that all Davidenkow's cases probably suffered from PMA, ignoring that their case did not fit at all in Davidenkow's description.

In 1975 Schwartz and Swash described a 27-year old male with progressive weakness and atrophy of the periscapular, triceps, biceps and foot extensor muscles. There was a mild bilateral facial weakness as well, making the clinical picture of a FSH syndrome complete. The neck muscles, the deltoid and the extensor digitorum brevis muscles were virtually uninvolved. All sensory qualities were impaired in a symmetrical glove and stocking distribution. The family was not examined, but was reported to be unaffected. Muscle biopsy and EMG findings were compatible with a neurogenic disorder. The sensory nerve conduction velocities were

slowed, as was the motor nerve conduction velocity in the median nerve. Apart from the hereditary aspect, this case fitted Davidenkow's description quite well.

Toghi et al. (1971) reported two sibs, a 14-year old boy and a 12-year old girl, with progressive weakness and atrophy in a SP distribution with onset at the age of seven, and with sensory disturbances of glove and stocking type. Pes cavus and quinovarus was present bilaterally. EMG and muscle biopsy suggested a neurogenic disorder. The motor nerve conduction velocities of the ulnar and peroneal nerves were within normal limits. Sural nerve biopsy showed demyelination and degeneration of axons. All findings were indicative of a neuropathy. Details of the family were lacking. The authors presumed autosomal recessive inheritance.

The patient described by Spalke et al. (1976) will be mentioned because she was presented as a case of SP amyotrophy, although there were some details that made her case different from Davidenkow's description. The authors reported a 41-year old woman who was noted to have hanging shoulders at the age of 17. When 31 years old she developed, in a couple of weeks, progressive weakness of the right foot and toe extensors, accompanied by paraesthesias in her right leg. Two years later the left shoulder girdle weakened and atrophied in a few months, accompanied by cramp-like pain. This muscle weakness gradually progressed to a symmetrical FSH syndrome with ptosis and "bouche de tapir". At the time of examination the pain in her left arm was still present. There was a stocking and glove distribution of impairment of pain, temperature and touch sensation. The vibration and position senses were normal. Electrocardiography revealed a right bundle branch block. EMG showed a myopathic pattern. The motor nerve conduction velocities were within normal range. Only the sensory nerve conduction velocity of the left median nerve was decreased, and histochemical examination of the deltoid and anterioir tibial muscle revealed myopathic features. The biopsy of the sural nerve showed no histological or ultrastructural abnormalities. The father, grand-father, two paternal aunts, and one paternal cousin were reported to have

problems of gait, suggesting an autosomal dominant mode of inheritance. They were not examined, however. The authors concluded that their case could not be classified. Harding and Thomas (1980) described an interesting family in which the female proband showed all features of Davidenkow's syndrome. Her sister has distal sensory loss and muscle weakness, compatible with Charcot-Marie-Tooth disease (PMA), while a deceased brother had shown generalized weakness of the upper limbs with normal strength in the lower limbs. The diagnosis was supported by EMG examination. The parents of these three sibs were allegedly not affected. Harding and Thomas (1980) suggested that Davidenkow's syndrome might be "a phenotypic manifestation of type I hereditary motor and sensory neuropathy" (PMA), but they were unable to prove the autosomal dominant mode of inheritance.

The discussion on Davidenkow's syndrome, autosomal dominant SP atrophy with sensory disturbances distally on the extremities, can be summarized best by the observation that since the original publications this syndrome has never been described.

The sporadic case described by Schwartz and Swash (1975) and the two possibly autosomal recessive cases reported by Toghi et al. (1971), and the cases of Harding and Thomas (1980) cannot be considered to suffer from the same disorder.

3.7. Spinal muscular atrophies

The spinal muscular atrophies (SMA) have received tremendous interest from neurologists and geneticists in recent years. Wohlfart et al. (1955) and Kugelberg and Welander (1956) separated hereditary proximal SMA from the limb-girdle syndrome. Their description can be summarised as follows:

1. Onset of symptoms from childhood to adolescence.
2. Proximal muscular atrophy.
3. Presence of fasciculations.
4. No bulbar involvement.
5. Slowly progressive clinical course.
6. Neurogenic findings on EMG and muscle biopsy.
7. Autosomal recessive mode of inheritance.

Gradually the syndrome, as outlined above, was expanded. Magee and De Jong (1960) were the first to describe autosomal dominant inheritance. Tsukagoshi et al. (1965) reported adult onset and involvement of the bulbar musculature. Numerous additional reports on SMA have been published. Several attempts at classification have been made (Namba et al., 1970; Emery, 1971; Pearn, 1981), using the criteria of the clinical picture, the age of onset and the mode of inheritance. In some instances SMA is part of a more complex clinical picture (Pearn, 1981). Although autosomal recessive inheritance is present in most cases, no enzyme deficiency has ever been observed with exception of a recent report on a young male with hexoseaminidase A deficiency (Johnson et al., 1982).

The diagnosis of SMA is based on the clinical picture, on the results of EMG, on the examination of muscle biopsies, and sometimes, on the study of muscle innervation as well (Coërs et al., 1973; Coërs and Woolf, 1981). Determination of the serum CK activity plays no significant role in the diagnosis of SMA, as it is more commonly only slightly raised, and does not discriminate SMA from myopathic conditions.

The clinical picture is that of muscular atrophy with fasciculations in the absence of sensory abnormalities. Occasionally extensor plantar responses are found (Bouwsma, 1978). Such findings will never be present in FSHD. Hypertrophy of the calf muscles, foot deformities and muscle contractures are frequently noted in SMA and very rarely in FSHD. Namba et al. (1970) reported cranial nerve involvement (including facial weakness) in 17.8% of his cases with juvenile chronic proximal SMA and in 31% of his cases with adult onset chronic proximal SMA. The fasciculations of the tongue, the bulbar involvement, and the tremor of the hands render a confusion with FSHD unlikely, even on clinical grounds alone.

EMG will show spontaneous activity such as fibrillations or fasciculations, and motor unit action potentials of long duration and high amplitude, with a reduced interference pattern on voluntary contraction (Meadows et al., 1969). Yet, EMG occasionally has been found to be normal or even myopathic, as

defined in chapter 2 (Emery, 1971). A myopathic pattern is not in frequently found in SP-SMA (Kaeser, 1965, Mercelis et al., 1980).

Muscle histology reveals atrophy of groups of fibres (group atrophy). Histochemical studies may show type grouping, a phenomenon explained by collateral reinnervation of affected fibres by normal motor neurons. Particularly in longstanding cases, target fibres may be present. In early stages of neurogenic atrophy, small angular fibres may be seen, scattered between normal looking fibres, but small angular fibres may also be the only abnormality in FSHD. To make the picture even more complicated, myopathic features such as variation in fibre size, rounded fibres, central nuclei, basophilic fibres, and even necrosis and phagocytosis may be found in cases with neurogenic atrophy (Drachman et al., 1967; Gardner-Medwin et al., 1967; Mumenthaler, 1970; Namba et al., 1970; Achari et al., 1974). These changes are explained as a result of partial and defective reinnervation by neighbouring motor neurons. It should be clear that the diagnosis of SMA hinges on the laboratory examinations in many cases, but that the same examinations could lead to faulty conclusions (Mercelis et al., 1980).

The most fruitful classification of the SMA's at present appears to be the one proposed by Emery (1981), which is presented in a slightly modified form in Table 3.1. Although the facial muscles may be involved in a considerable amount of the cases with proximal SMA, and particularly later in the course of the disease, the other clinical features and the laboratory examinations virtually never bring FSHD in the differential diagnostic considerations, even in cases with autosomal dominant inheritance. The same holds true for progressive bulbar paralysis of childhood or Fazio-Londe disease (Gomez, 1979; Bundey, 1981). All 14 reported cases in the literature had facial weakness, but they all had involvement of other cranial nerves as well.

It appears that in the description of SMA the adjectives FSH and SP are used in a literal sense, indicating the main sites of involvement. Since both adjectives may cover a part of FSHD, it is clear that FSH-SMA as well as SP-SMA must be considered in the differential diagnosis. The cases reported in the literature

under these diagnoses will be discussed briefly, in the chronological order as outlined in Table 3.2. Cases with a cardiopathy will be discussed separately in the next section.

Mares et al. (1964) described a father, his son and two daughters all of whom developed a progressive FSH syndrome with facial involvement. The age at onset varied from eight to 20 years. EMG studies performed in all patients showed a reduced interference pattern with action potentials of increased amplitude.

Table 3.1. Classification of the Spinal Muscular Atrophies. (modified after Emery, 1981)

I.	Proximal SMA		
	A Infantile, autosomal recessive		
	B Intermediate, autosomal recessive		
	C Juvenile	1. autosomal dominant	
		2. autosomal recessive	a. Usual form (Kugelberg-Welander)
			b. Ryukyu form
			c. with microcephaly
	D Adult	1. autosomal dominant	
		2. autosomal recessive	
		3. X-linked recessive	
II.	Distal SMA	1. autosomal dominant	
		2. autosomal recessive	
III.	Juvenile progressive bulbar palsy, autosomal recessive		
IV.	Scapuloperoneal SMA		
	A. Juvenile	1. autosomal dominant	
		2. autosomal recessive	
	B. Adult	1. autosomal dominant	
V.	Facioscapulohumeral SMA, autosomal dominant		

Table 3.2. Reports on facioscapulohumeral and scapuloperoneal spinal muscular atrophies without a cardiopathy (only first authors cited)

Facioscapulohumeral Spinal Muscular Atrophy		
1. autosomal dominant:	Mares	1964
	Fenichel	1967
	Ricker	1968
	Furakawa	1976
	Furakawa	1981
2. sporadic cases:	Furakawa	1969
	Patel	1969
	Krüger	1974
Scapuloperoneal Spinal Muscular Atrophy		
A. Juvenile onset		
1. autosomal dominant:	Feigenbaum (cases 1,2,3,6)	1970
	Serratrice (cases 1,2,3)	1976
2. (autosomal) recessive:	Feigenbaum (cases 5,7,8)	1970
	Negri	1973
	Takahashi (case 1)	1974
	Mercelis	1980
3. sporadic cases:	Emery	1968
	Munsat	1968
	Zellweger	1968
	Schuchman	1970
	Feigenbaum (cases 4,9,10)	1970
	André	1972
	Hromada	1973
	Serratrice (cases 7,8)	1976
B. Adult onset		
1. autosomal dominant:	Kaeser	1964/1965/1975
	Tsukagoshi	1969
	Serratrice (cases 4,5)	1976
2. sporadic cases:	Fotopulos	1966
	Takahashi (case 2)	1974
	Serratrice (cases 6,10)	1976

These findings were not specified per patient or per muscle. Muscle biopsies revealed myopathic abnormalities in two cases. The authors did not arrive at a definite conclusion about the primary site of the lesion.

Fenichel et al. (1967) reported on a mother and a daughter who both developed facial weakness at the age of 13, followed by shoulder girdle weakness. The deltoid muscle appeared weaker than the pectoralis muscle. No fasciculations were observed. Only in the daughter the disease had progressed to pelvic girdle muscle involvement. Sensory examination was normal. A first EMG in the daughter was normal, but a repeated study showed increased insertional activity and occasional fasciculations in the deltoid and biceps muscles without other neurogenic features. A similar, though not specified, result was obtained from the mother. Biopsy of the left quadriceps muscle in the daughter revealed a few angulated fibres of both fibre types. The neurogenic basis of the disorder was "identified primarily by the muscle biopsy". Since small angulated fibres are known to occur frequently in FSHD, this basis appears very small indeed.

A similar diagnostic problem is posed by the cases described by Ricker et al. (1968). A father and a son were reported with a progressive FSH syndrome with facial involvement since the age of 23. EMG in the son demonstrated myopathic and neurogenic features. A muscle biopsy showed myopathic features and isolated small angulated fibres, so that the diagnosis neurogenic FSH syndrome appears quite debatable in these cases.

Furakawa and Toyokura (1976) reported on a mother, her daughter and her son, all of whom had developed a FSH syndrome in their second decade of life. The tongue and other bulbar muscles apparently were normal. A previous biopsy of the left deltoid muscle in the mother was reported to show myopathic features. EMG in all three cases revealed fasciculations, and neurogenic and myopathic characteristics. Recently (1981) Furakawa et al. reported briefly on 13 patients out of eight families with FSH-SMA. Autosomal dominant inheritance was said to be present in most cases. Electrocardiographic abnormalities were noted in several patients, but this was not specified. Details on these

patients are eagerly awaited, especially since the diagnosis in the cases mentioned before depends heavily on EMG. As small angulated fibres are quite common in muscle biopsies of patients with FSHD (Dubowitz and Brooke, 1973) and as neurogenic findings on EMG in these patients are not rare (McComas, 1977), it is reasonable to question the existence of autosomal dominant FSH-SMA.

A few reports on sporadic cases with FSH-SMA have been published. In older literature this syndrome bears the eponyms of Vulpian and Bernardt. The deltoid muscles are said to become affected early in these cases, which contrasts with the findings in FSHD.

The first patient described by Furakawa et al. (1969) had facial weakness and progressive shoulder girdle weakness since he was 18 years old. The second patient had shoulder girdle weakness only. Both had fasciculations and neurogenic findings on EMG. Muscle biopsy in the first case showed large groups of small fibres. No other members of the families were affected.

Patel and Swami (1969) reported a teen-age case of SMA with shoulder girdle weakness and equivocal facial weakness, without further elaboration or discussion.

The 61-year old man studied by Krüger and Frank (1974) had facial weakness and a slight ptosis on the right side since the age of 55. The shoulder girdle and upper arm muscles were weak and atrophic. The deltoids were spared. Fasciculations were present in the upper arms. The pelvic girdle and legs were not involved. EMG and muscle biopsy supported the diagnosis neurogenic muscular atrophy. His family was said to be free of neuromuscular diseases, but was not examined.

The cases of SP-SMA with juvenile onset and with adult onset will be discussed separately, in accordance with the general principles of Emery's classification. The question remains if such a division is justified but, so far, all cases belonging to one family had either juvenile or adult onset. Sporadic cases are all those cases in which the mode of inheritance was uncertain.

Feigenbaum's (1970) case 2 was the only one with onset of the disease in the shoulder girdle muscles. In all other cases

the disease started in the peroneal muscles, and ran an ascending course, which is not the usual pattern of FSHD. Another remarkable feature of SP-SMA is the high incidence of foot-deformities such as pes cavus and pes equinovarus. Kaeser (1965, 1975) and Mercelis et al. (1980) emphasized the often conflicting findings on EMG and muscle biopsy regarding the primary site of the lesion, and the possibility of finding neurogenic features in one part of the body and myopathic features in another part on EMG examinations.

Cases with autosomal dominantly inheriting SP-SMA of juvenile onset have been reported by Feigenbaum and Munsat (1970; cases 1,2,3 and 6) and by Serratrice et al. (1976; cases 1,2 and 3).

A recessive mode of inheritance could have been present in three male cases (5,7 and 8) reported by Feigenbaum and Munsat (1970). The diagnosis in these cases was supported both by EMG and muscle biopsy.

The male patient reported by Negri et al. (1979) was mentally retarded. The two living brothers of this patient had distal atrophy of the legs, with fasciculations and neurogenic findings on EMG. Neither the parents nor the three sisters had complaints.

The pedigree of the first case (a male) reported by Takahashi et al. 1974 revealed consanguinity. The authors suggested autosomal recessive inheritance, although no similar cases were reported in the family. The patient had a progressive SP syndrome since the age of 12 without facial involvement. EMG showed myopathic features in the lower legs and neurogenic features in the upper arms. Biopsy of the gastrocnemius revealed myopathic changes, while biopsy of the triceps brachii demonstrated group atrophy.

Mercelis et al. (1980) reported on two brothers with SP-SMA. In the elder patient, EMG had shown a myopathic pattern on several occasions. The muscle biopsy findings in this case were equivocal. His younger brother clearly showed neurogenic features on EMG and muscle biopsy. Both had presented with foot extensor weakness in the first decade. No definite conclusion on the

pattern of heredity could be reached in all these recessive male cases.

Sporadic cases of SP-SMA, both males and females, have been reported by Emery et al. (1968), Munsat (1968), Zellweger and McCormick (1968), Schuchmann (1970), Feigenbaum and Munsat (1970, cases 4,9 and 10), André et al. (1972), Hromada et al. (1973), and Serratrice et al. (1976, cases 7 and 8). Serratrice's case number 9 had sensory disturbances and bilateral extensor plantar responses. This case was rather deviant from all other cases and cannot be considered a SP-SMA.

Autosomal dominant chronic SP-SMA of adult onset was first described by Kaeser (1964, 1965, 1975). Twelve persons (six males, and six females) in five generations were affected. Four patients were examined (1965). The disease started between 30 and 50 years. Weakness and atrophy of all lower leg muscles were the presenting signs. Initially the intrinsic foot muscles, the extensor digitorum brevis and the plantar muscles were all spared. In the first three generations the disease had spread to involve the thigh and pelvic girdle muscles. In 1965 the shoulder girdle muscles were reported not to be affected in these generations. In 1975, however, Kaeser stated that these muscles were slightly affected, although all these patients had died long before 1965. Even the fourth generation was reported in 1965 to be without shoulder girdle involvement. In this generation, one patient had weakness of the palatal and pharyngeal muscles, leading to dysphagia. Autopsy was performed in this case. Shoulder girdle, upper arm and facial weakness occurred only in the fifth generation. One patient in this generation also had dysphagia and extraocular muscle weakness. The distribution of the shoulder girdle weakness was particular in that the sternocleidomastoidei, the upper part of the trapezius, the rhomboidei, the supraspinatus, the infraspinatus and the triceps brachii muscles were severely affected, while the serratus, deltoid and biceps muscles remained relatively spared.

EMG studies revealed somewhat different findings on repeated examinations, one time thought to be more compatible with a chronic neurogenic lesion, the other time with a myopathic

disorder. The motor nerve conduction velocities were normal on repeated occasions. Muscle biopsy in one case revealed myopathic features (1965). Autopsy in another case showed group atrophy in all muscles examined. The anterior horn cells of the spinal cord and the bulbar motor nuclei demonstrated vacuolisation and central chromatolysis. The peripheral nerves were all normal (1964). In 1977 Probst et al. published another autopsy report on a member of this family. The number of anterior horn cells were normal at all levels but the anterior horns showed axonal swellings, accumulation of possibly pathological lipofuscin and large numbers of intra-axonal corpora amylacea. The anterior roots, the peripheral nerves and the intramuscular nerve endings appeared without abonormalities. The muscles showed selective type 2 atrophy, type grouping and accumulation of neutral fat, mainly in the type 1 fibres. All the abnormalities found in Kaeser's family suggested anterior horn cell disease, yet they are distinct from those to be found in chronic proximal SMA (Kugelberg and Welander, 1956) in which the number of anterior horn cells is reduced considerably.

The three sibs, presented by Tsukagoshi et al. (1969) pose a problem as to the correct diagnosis. One patient had "disturbances of superficial sensations in the distal parts of the four limbs". Demyelination was present in a sural nerve biopsy in this case. EMG and muscle biopsy in the other patients were compatible with a neurogenic lesion. A sural nerve biopsy in one of these patients was normal. As the father was "probably affected", autosomal dominant inheritance was suggested. In spite of the conflicting findings, the authors considered their cases to suffer from SMA. Harding and Thomas (1980) however, considered these cases to be examples of Davidenkow's syndrome.

Cases 4 and 5 reported by Serratrice et al. (1970) were also autosomal dominant cases with adult onset of SMA, and first symptoms in the legs. Details on these patients were not offered.

The first sporadic case with adult onset SP-SMA was reported by Fotopulos and Schulz (1966). This 55-year old woman complained of weakness in both legs since she was 44. Her condition had progressed to a SP syndrome, with weakness of the neck flexors

and the sternocleidomastoidei muscles as well. Fasciculations of the thigh muscles were observed on one occasion. Sensory examination was normal. The family history was negative for neuromuscular disorders. EMG showed a neurogenic pattern in the legs and a myopathic pattern in the shoulder girdle muscles. Biopsy of the calf muscles demonstrated myopathic features and group atrophy. The authors thought their case an intermediate between a myopathic and a neurogenic condition and unclassifiable in the current taxonomic schemes. Others, like Kaeser (1975), had no hesitation in grouping this case under the neurogenic conditions.

The second case, reported by Takahasi et al. (1974), had a SP syndrome with a slowly ascending course. EMG of the arms showed myopathic findings, and EMG of the legs both myopathic and neurogenic features. Biopsy of the quadriceps muscle revealed both myopathic characteristics and a few groups of small fibres.

The cases 6 and 10, reported by Serratrice et al. (1976), were apparently sporadic. In the first case the disorder had started in the legs; in the second case shoulder girdle onset was suggested. Details on these cases were not offered.

One must conclude that the existence of autosomal dominant FSH-SMA has not been firmly established. The cases reported as such are not (yet) proven to be non-FSHD. Sporadic cases with SMA in a FSH distribution have been reported, but are apparently rare. SP-SMA is a well established entity. The ascending course which is almost invariably present, the lack of facial weakness in the majority of cases and the high frequency of foot deformities are relative arguments against the diagnosis FSHD. Bulbar weakness excludes FSHD. EMG and muscle biopsy may yield both myopathic and neurogenic features, making the proper diagnosis difficult in a considerable number of cases. These findings have been explained as the result of dying back of terminal axonal twigs (Jennekens, 1975).

3.8. Facioscapulohumeral and scapuloperoneal syndromes with cardiomyopathy

FSH syndromes with cardiomyopathy can be divided in:

A. X-linked recessive myopathic conditions with muscle contractures, in which the cardiomyopathy presents as a progressive impulse generation and conduction defect, leading to persistent atrial paralysis (PAP), with ventricular hypertrophy in the elderly patients.

B. Autosomal dominant myopathic conditions with muscle contractures, cardiac impulse conduction defects, and cardiomegaly.

C. Neurogenic conditions with impulse conduction defects and cardiac enlargement.

A. Clinical medicine is long since familiar with observations that atrial paralysis may occur as a terminal condition in myocardial infarction and in hyperkalemia. It also can occur as a transient phenomenon in severe sinus arrythmias, in anoxia, drug intoxication and in open heart surgery. A prolonged and persistent atrial paralysis (PAP) was described for the first time in 1965 in a patient with a FSH syndrome (Bloomfield and Sinclair-Smith). Since then PAP has been described in sporadic and familial cardiac disorders, with or without myocardial amyloid deposits (Allenworth et al., 1969; Nagle et al., 1972). PAP, in association with a myopathy, was reported in three sporadic cases (Bloomfield and Sinclair-Smith, 1965; Caponetto et al., 1968; Baldwin et al., 1973). They were all studied by cardiologists who paid extensive attention to the cardiac abnormalities but, regrettably, poorly informed the readers about the neuromuscular condition. Because PAP is very rare, and all three cases were men with a FSH myopathy, it is very likely that these patients were suffering from the same condition described later as X-linked recessive scapuloperoneal myopathy with cardiomyopathy. Moreover, photographs of these three patients suggested that they all had abduction contractures of the shoulders and flexion contractures of the elbows. Every

author offered a slightly different name for the same syndrome: X-linked SP syndrome (Thomas et al., 1972), X-linked scapulo-humero-distal muscular dystrophy (Rotthauwe et al., 1972), X-chromosomaler benigner Muskeldystrophie mit Frühkontrakturen (Camman et al., 1974), X-linked humeroperoneal neuromuscular disease (Waters et al., 1975). It is debatable if the family, described by Emery and Dreifuss (1966) under the name "benign X-linked muscular dystrophy", should be included. This family differed from the others by presenting with a limb-girdle syndrome instead of a SP syndrome, and by the absence of a flexion limitation of the neck. Since calf hypertrophy was absent and PAP was suggested in two cases, this family is usually included in the description of the X-linked SP syndrome with cardiomyopathy (Rowland and Layzer, 1979). Rowland et al. (1974) even suggested the name "Emery-Dreifuss muscular dystrophy" while describing an extensively studied sporadic case.

The disorder usually manifests itself between the age of two and ten years, affecting males only. The reported pedigrees are compatible with X-linked recessive inheritance. In the family reported by Thomas et al. (1972), the disorder was linked with deutan colour blindness. The initial signs were flexion contractures of the elbows, accompanied (or followed within a few years) by ankle contractures. Upper arm weakness and atrophy was an early finding in all families, except in the one of Emery and Dreifuss. In this family pelvic-femoral weakness appeared early, progressing to a limb-girdle syndrome. In the other families the upper arm and peroneal weakness was conspicuous, while the periscapular muscles were less affected. Several patients with mild facial weakness were present in all families. Accordingly, it is quite understandable that the sporadic cases were described as a FSH syndrome. Lack of muscle hypertrophy and early muscle contractures were other features that distinguished this syndrome from benign X-linked recessive muscular dystrophy (Becker type). Elbow and ankle contractures were early signs. Limitation of flexion of the neck and bending of the back were present in all families, except in the one reported by Emery and Dreifuss (1966). Abduction contractures of the shoulders were mentioned or

were suggested from photographs in all families. Pes cavus was frequently encountered. EMG revealed a myopathic pattern in most patients. In one patient of Thomas' family and in several patients of the two families examined by Waters et al. large motor unit action potentials of long duration were found. Motor and sensory nerve conduction studies, when made, were normal in all cases. Muscle biopsies revealed myopathic changes. Rotthauwe et al. (1972) found type 1 predominance in his two biopsies. Waters et al. (1975) found type 2 predominance and type 1 atrophy. Because of the EMG and biopsy findings, these authors remained undecided on the primary lesion in their patients. Post-mortem studies, carried out on one patient of Thomas' family, confirmed the myopathic nature of the disorder. The peripheral nerves were found to be normal. The spinal cord, unfortunately, was not examined. Histological examination of the heart in this case showed "extensive fibrous replacement of the myocardium".

The cardiological examination in these families remained mostly limited to physical examination and an electrocardiogram (ECG). Only the report of Waters et al. (1975) on two families furnished quite extensive data. The cardiac abnormalities started later in life than the myopathy, and consisted of a progressive slowing of the pulse generation and conduction, leading to a progressive bradycardia. Complaints of dizziness or syncope were rare. Most patients were aware of the progressive slowing of their pulse. ECG was made of all 15 affected patients. No ECG was normal. P-wave abnormalities with a first degree atrio-ventricular (A-V) block were present in four patients, atrial flutter in one, atrial fibrillation in two, a complete A-V block in one, atrial fibrillation with complete A-V block in three, and PAP with a slow junctional pacemaker in four patients. Emery and Dreifuss (1966) and Rotthauwe et al. (1972) reported similar findings although several ECG's were normal. In the other families (Thomas et al., 1972; Camman et al., 1974), ECG's were registered in a limited number of cases. They revealed conduction defects but no PAP.

Five of Water's patients underwent echocardiography and cardiac catheterisation. Two patients with normal ventricular

rates had a normal ventricular function. Three patients, with chronic bradycardia secondary to PAP, had a marked increase in the left ventricular end-diastolic volume and left ventricular mass. These patients had demonstrated cardiomegaly on physical examination. The authors suggested that these findings indicated a compensatory physiologic response to the profound bradycardia of long duration, and not intrinsic ventricular myocardial disease.

Thomas et al. (1972) did not comment specifically on the condition of the atria in their autopsy report. Therefore, the selected degeneration and the fibrosis of the atrial myocardium, suggested as an explanation for PAP (Waters et al. 1975), still need pathological documentation. It is important to secure the diagnosis PAP during life by as many criteria as possible. They are:

1. Absence of P-waves on regular, oesophageal and intra-cardiac ECG's.
2. Supraventricular type of QRS.
3. Absence of A-waves on jugular venous pulse on right atrial pressure tracings.
4. Inability to stimulate the atria electrically.
5. Immobility of the atria on echocardiography, fluoroscopy and cineangiography.

The necessity of cardiac catheterisation is debated. However, the inability to stimulate the atria is conclusive. It may be hard to make the diagnosis on an ECG alone.

Most patients die suddenly at an early age. Rotthauwe et al. (1972) reported sudden death between 37 and 59 years of age. Waters et al. (1975) recommended "on-demand" ventricular pacemaker insertion in patients who have ventricular rates below 50 beats per minute.

B. The father and his three children reported by Chakrabarti and Pearce (1981) suffered from a neuromuscular disorder with progressive contractures of the neck and limb muscles. All four patients had a SP syndrome with normal facial muscles. Histological examination of a muscle biopsy in one child and a

normal spinal cord on post-mortem examination of another child suggested the myopathic nature of the condition. The mode of inheritance appeared to be autosomal dominant with late onset in the father, but early onset (before the age of three) in his children, which makes this condition distinct from the X-linked recessive myopathy described above. The cardiac abnormalities were present in the father and in two of the children, and included atrial fibrillation, left bundle branch block, absence of P waves with a nodal escape rhythm and complete heart block, leading to cardiomegaly and heart failure. On the basis of this information, the disorder in this family appears to be an independent entity.

C. The patients reported by Mawatari et al. (1973), Takahashi et al. (1974) and Jennekens et al. (1975) constitute a different group of diseases. Mawatari et al. (1973) examined three male patients with a scapulo(humero)peroneal syndrome. The age at onset varied between seven and ten years. Two brothers had a restriction of neck flexion, ankle contractures and complete A-V block with bradycardia on EKG examination. The other patient (a maternal cousin) had ankle contractures and an incomplete right bundle branch block, with left axis deviation on his ECG. Two other maternal cousins had peroneal weakness, with atrophy and ankle contractures. They were not examined cardiologically. Two of the mothers of these patients had a first degree A-V block, as did the patients' maternal grandmother. The most likely mode of inheritance appeared X-linked recessive with slight expression in the carriers, but autosomal dominant inheritance with variable expression could not be ruled out. EMG and muscle biopsy were compatible with a neurogenic condition. The motor nerve conduction velocities were normal.

The last two patients (two brothers) presented by Takahashi et al. (1974), under the title "Scapuloperoneal dystrophy associated with neurogenic changes", appeared to be the same as the ones reported by Takahashi et al. in 1971. These patients developed progressive muscular atrophy when 11 and 12 years old. No other members were said to be affected, but they were not

examined. Since every mode of inheritance was possible, this was not discussed. Contractures were not present in these patients. Bulbar muscular weakness with facial involvement appeared between the 40th and 50th years. Syncopal episodes and palpitations were reported after the patients had passed the 35th year. Both patients had a complete A-V block with high T-waves and bradycardia on their ECG's. Chest X-rays showed cardiac hypertrophy. EMG and muscle biopsy demonstrated both myopathic and neurogenic features. One of these patients sustained a cerebral infarction. He died four years later. Post-mortem examination showed the anterior horn cells of the spinal cord to contain a large number of lipofuscin granules, but the number of cells seemed normal at all levels. In the brainstem the facial and hypoglossal nuclei were well preserved, except for a few atrophic cells. The tongue demonstrated abundant myopathic changes without neurogenic features. The heart revealed many atrophic fibres of variable size, located mainly in the subendocardial and subpericardial tissue. The authors considered a decision as to the primary site of the lesion impossible. They regarded the myopathic changes too extensive to be explained as secondary phenomena. The spinal cord was normal and a peripheral nerve lesion seemed unlikely, because of the normal sensory examination. Unfortunately, no nerve conduction studies were undertaken, no nerve biopsy was done, and the nerves were not examined at autopsy. A peripheral nerve lesion, therefore, cannot be ruled out. Nonetheless, the authors suggested that dying back of terminal axonal twigs might explain the phenomena encountered.

Jennekens et al. (1975) suggested a similar mechanism to be present in two families (26 patients) with an autosomal dominant "scapulo-ilio-peroneal syndrome with cardiopathy". Among the 16 examined patients, the age of onset varied between 17 and 42 years. The bulbar muscles and the neck flexors were affected in approximately a third of all patients. Occasionally facial weakness was noted. Contractures were absent. ECG changes developed gradually from nonspecific findings to abnormalities of pulse-formation and conduction. PAP was not encountered, Radiological examination demonstrated cardiac hypertrophy and

left hemidiaphragm elevation in many cases. EMG showed neurogenic and myopathic characteristics. Although most muscle biopsies demonstrated group atrophy, the myopathic features were quite extensive with a remarkable interstitial and perivascular inflammatory reaction in four out of eight biopsies. Immunological tests were normal and did not support the thesis that the inflammatory reaction could be considered a secondary immunological response to the underlying muscle degeneration (Papapetropoulos and Bradley 1974). Genetic studies using 19 genetic markers failed to demonstrate linkage.

The findings on clinical and laboratory examination made the families of Mawatari et al., Takahashi et al., and Jennekens et al. not quite comparable. Also, the mode of inheritance was different in all families as far as this could be ascertained. Possibly all these reports deal with different diseases.

In summary, X-linked recessive SP myopathy with cardiomyopathy appears an independent, well defined, and quite consistent entity. The mode of inheritance, and clinical features, such as muscle contractures and a progressive cardiac conduction defect leading to the rare syndrome of persistent atrial paralysis, make this syndrome distinct from FSHD. Although the adjective FSH would fit this syndrome equally well, it appears appropriate and in accordance with the literature to continue to call this syndrome X-linked recessive SP myopathy with cardiomyopathy. A similar disorder without documented PAP but with an autosomal dominant mode of inheritance has been reported.

Other FSH syndromes with cardiomyopathy have been described. Bulbar and facial weakness were present only occasionally. All modes of inheritance have been suggested. Neurogenic abnormalities were present in all cases, but in several reports the myopathic features were so extensive that the authors could not reach a conclusion about the primary lesion. The findings were similar to those found in cases described as chronic adult SP-SMA.

3.9. Summary

Sporadic cases with FSH myopathy have been repeatedly documented (Walton and Gardner-Medwin, 1981). Autosomal dominant SP myopathy without involvement of the facial muscles has never been reported, autosomal dominant SP myopathy with facial weakness is indistinct from FSHD (Kazakow et al., 1975). The families of the sporadic cases with SP myopathy are not examined exhaustively, or not at all. Even without this information, it appears that there are no good grounds to consider SP myopathy a separate and independent entity.

Many disorders are reported to resemble FSHD at some stages of their courses. Yet all these disorders reveal additional, though sometimes minimal signs pointing at their proper diagnosis. The examination of families renders important clues to the diagnosis. Autosomal dominant inheritance is suggestive for FSHD. In cases where the family cannot be examined, one has to rely heavily on laboratory studies such as EMG and muscle biopsy and, occasionally, on biochemical studies. But even in autosomal dominant cases, additional studies may be necessary to rule out neurogenic conditions and rare disorders such as mitochondrial myopathies.

Polymyositis presenting with a FSH-syndrome is rare. The correct diagnosis is important because it could involve therapeutic measures like corticosteroids. The diagnosis might be difficult to make as occasionally extensive inflammatory reactions are present in muscle biopsies of patients with FSHD (Munsat et al., 1972). Mitochondrial abnormalities will be suspected on histochemical studies of muscle biopsies, although the clinical picture may have suggested already that FSHD is a less likely diagnosis (Hudgson et al., 1972). The existence of autosomal dominant FSH-SMA has not been established beyond doubt. The small angulated fibres and the neurogenic features on EMG in these cases are reported in FSHD as well. None of the patients had group atrophy or target fibres in their muscle biopsies. Sporadic cases of FSH SMA have been recognised since the end of the nineteenth century. This disorder necessitates laboratory

studies in sporadic cases. SP-SMA appears to be a well established disorder. The clinical course is an ascending one. Laboratory studies may sometimes reveal myopathic features in some muscles and neurogenic features in other muscles. Fasciculations and foot deformities, if present, are relative arguments against FSHD. Autosomal dominant SP amyotrophy with sensory disturbance (Davidenkow's syndrome 1927; 1929; 1930; 1939) has never been observed since the original descriptions. Sporadic and possibly autosomal recessive disorders resembling Davidenkow's syndrome have been reported. The sensory abnormalities exclude FSHD. X-linked SP syndrome with cardiomyopathy differ from FSHD by their mode of inheritance, the cardiac conduction disorders, and by the clinical picture of muscular atrophy with rather extensive muscle contractures. Both myopathic and neurogenic conditions have been reported, but also conditions in which the primary lesion could not be decided upon. This syndrome might turn out to be heterogeneous. Also a similar disorder with autosomal dominant inheritance has been reported recently (Chakrabarti and Pearce, 1981). More important to the differential diagnosis of FSHD are the two families reported by Jennekens et al. (1975) with autosomal dominant neurogenic muscular atrophy and progressive cardiac pulse formation and conduction defects. Most muscle biopsies showed group atrophy, but myopathic changes and inflammatory reactions were extensive on occasions that confusion with FSHD seems quite possible, if the results of muscle biopsies only are taken into account. Only a few of these patients had facial weakness.

Thus it appears that there is a fairly limited differential diagnosis of FSHD. Facial and shoulder girdle weakness, being the most conspicuous findings on clinical examination, are in themselves rather unspecific. The term FSH syndrome serves no other purpose than to summarize the physical examination of a patient.

Chapter 4

Facioscapulohumeral disease: personal observations

4.1. Introduction

The general clinical picture of FSHD is fairly well established but the extent and the limits of the disease are not clearly defined. Moreover, several issues, such as possible differences between males and females, the possibility of environmental influences on the manifestation of the disease, the problem of genetic heterogeneity and others, are still unsettled.

In order to study the various aspects of FSHD we started with the probands of 19 families. The terms family and kindred will be used as synonyms in this study. The probands of the families B,C,D,E,F,G,J,K,M,N,P,R and S were all known at the Muscle Research Center of the University of Amsterdam (Head Prof. Dr. J. Bethlem). The probands of the kindreds H,I,L, were seen regularly at the Neuromuscular Clinic of the University Hospital of Leiden (Head Dr. A.R. Wintzen). The probands of the families O and Q were known at the Neurological out-patient Department of the University of Amsterdam (Head Dr. J. van Manen). The Department of Human Genetics of the Free University of Amsterdam (Chairman Prof. Dr. A.W. Eriksson) referred the proband of family A to us. This patient was subsequently studied at the Muscle Research Center of the University of Amsterdam.

We reconstructed the pedigrees from anamnestic data, checking and expanding this information through the records of the registrar's office, to which our genealogist (Mr. L.P. Kuijt) had easy access. As many members of the families as possible were visited by the author at their homes and examined as extensively as possible, this being the only available method by which to determine whether someone is affected or not (Walton and Gardner-Medwin 1981). The persons examined are indicated in the pedigrees.

The support of the family doctors involved in this study was uniformly very positive. The patients varied in their degree of cooperation: only a few refused to be visited, most patients being eager to talk about the disease and about their families. The information regarding others, and especially more distant relatives, proved to be quite unreliable and confirmed earlier experiences of authors such as Tyler and Stephens (1950). Several patients refused a complete physical examination, the reasons for such refusal varying. However, all these patients could be persuaded to perform several tests of muscle function.

In a single visit it is impossible to assess what it means to each individual patient to have such a disease and, while examining the families, all kinds of reactions relating to the disease were observed. Some people were anxious to have confirmation that they were not affected, others sought the denial of an evident diagnosis. One unaffected person had made his family believe he had the same disease from which his father suffered, and he thought himself unfit to work. Many patients dissimulated their disabilities. It was interesting to note that a reluctance to a physical examination was never observed in the non-affected family members, while this reluctance was present in several of the asymptomatic patients. It was also impossible to know the real import of questions such as "Do I have the disease?" or "Is he or she affected?". On several occasions it was observed that the mechanisms of suppression and distortion of facts were quite strong. Also depressions and forced cheerfulness testified to the impact of this disease on the patients' existence.

4.2. The patients

One hundred and ninety individuals in 19 kindreds were examined at their homes (Table 4.1.). One hundred and seven gene carriers were identified. One hundred and eighty-nine persons are indicated in the pedigrees. The one person, that is not shown, is the mother of patient H V 20.

Table 4.1. All persons examined in 19 kindreds with FSHD.

		Affected	Possibly Affected	Not Affected	Total
Completely examined:	males	46	3	41	90
	females	28	2	31	61
Partially examined:	males	13		2	15
	females	20		4	24
		107	5	78	190

"Completely examined" means that the strength of all muscles or muscle groups described in Table 4.12. was graded. "Partially examined" indicates that not all muscles could be graded properly. This group includes severely affected patients, who refused a complete physical examination, but also obviously affected persons who refused to take off their clothes. Their muscles could be tested to a variable extent. All but one of these 33 patients had definite facial weakness. Testing of the facial muscles was never refused. The one patient without facial weakness was among a group of patients who were examined completely but in whom the grade of muscle strength was not recorded; therefore they were included in the group of "partially examined" patients. Six partially examined persons refused to take off some of their clothes, but they could be examined sufficiently so as to convince the examiner that they were not affected.

Three males (A IV 13, K V 23, K V 24) and two females (K V 2, P II 1) were considered "possibly affected". Physical examination did not reveal muscular weakness or a distinct

atrophy, but the history (patient P II 1, see section 4.22.) or the habitus of the patients (for instance an increased lumbar lordosis, a protruding belly, sloping shoulders, protruding scapulae or an increased distance between the medial borders of the scapulae with endorotation of the arms) was sufficient to raise the examiner's suspicion.

Table 4.2. gives all "possibly affected" persons in the kindreds. Persons not examined or deceased were designated "possibly affected" if the several sources of information within the families were not conforming.

Table 4.3. shows the number of all known patients. The not examined and the deceased patients all were recognisably affected.

Table 4.2. All "possibly affected" persons in 19 kindreds with FSHD.

	Examined	Not Examined	Deceased	Total
Males	3	2	5	10
Females	2	6	8	16
	5	8	13	26

Table 4.3. All affected persons in 19 kindreds with FSHD

	Examined	Not Examined	Deceased	Total
Males	59	7	29	95
Females	48	16	22	86
	107	23	51	181

Figure 4.1. represents the ages of the examined 107 patients. Table 4.4. gives the numbers of patients per age-decade.

The average duration of the disease at the time of examination (27.9 years) is based on anamnestic data of the 73 symptomatic patients and represented in Figure 4.2.. The average duration in males was 27.8 years and in females 29.9 years.

FIGURE 4.1: AGES IN YEARS OF 107 PATIENTS WITH FSHD (59 MALES, 48 FEMALES)

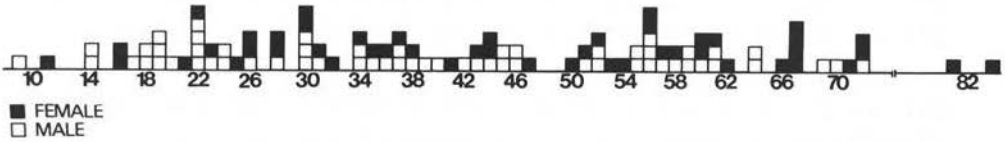

FIGURE 4.2: DURATION OF THE DEASE IN YEARS (46 MALES, 27 FEMALES)

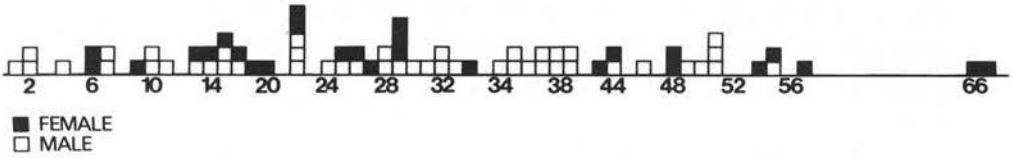

Table 4.4. Number of patients per age-decade.

Decade	1	2	3	4	5	6	7	8	9	Total
Males	1	8	10	12	8	12	6	2	0	59
Females	0	3	8	9	5	9	9	3	2	48
	1	11	18	21	13	21	15	5	2	107

In order to study phenomena such as penetrance and age of onset, we considered separately those sibships of which it could be reasonably assumed that all affected individuals had been identified. All these sibships had one definitely affected parent, with the exception of sibship P III. P II 1 must possess the abnormal gene, but she was completely healthy, when examined at the age of 68 years. The sibships were examined as extensively as possible. Because several authors (Tyler and Stephens 1950, Becker 1953) claimed that it was impossible to make the diagnosis before the age of seven, sibships consisting entirely of children in their first decade were excluded, with the exception of patient J VI 3, who was a nine-year old asymptomatic case. The sibships involved, indicated by their eldest representative, were A III 1, A V 4, A V 8, A V 14, B III 1, B IV 1, C III 1, D III 10, E III 1, E IV 1, E V 1, F IV 1, G III 17, H IV 3, H V 7, H V

16, H V 20, H VI 1, I V 6, I V 25, I VI 10, I VI 21, J III 1, J IV 1, J IV 27, J IV 38, J V 6, J V 15, J V 19, J V 23, J VI 3, K III 12, K III 18, K IV 1, K IV 15, L IV 8, L IV 40, L V 6, L V 10, L V 14, L V 83, M III 8, N IV 14, O III 6, P III 1, P IV 1, Q III 1, S III 1 and S IV 4. Only kindred R yielded no useful sibships as no sibship could be examined entirely. Sibship O III 6 consisted of the proband only. Also the probands in the other sibships (eleven males and four females) have to be excluded because of the bias of ascertainment. The same bias is present in the affected parents and grandparents of the probands as they are obligatory gene carriers. The numbers of individuals in these 49 sibships are shown in Table 4.5..

Table 4.5. Forty-nine sibships with FSHD in 17 kindreds.

	Males	Females	Total
Probands	10	4	14
Obligatory gene carriers	3	3	6
Affected sibs	44	41	85
Not affected sibs	37	43	80
	94	91	185

Figure 4.3. gives the distribution of the ages of all sibs involved, without the probands and the obligatory gene carriers. The ages recorded are the ages at the time of this study if they were alive, or the ages at their death.

FIGURE 4.3: AGES IN YEARS AT EXAMINATION OR OF DEATH OF 165 SIBS (81 MALES, 84 FEMALES) IN 49 SIBHIPS (17 KINDREDS) (PROBANDS AND OBLIGATORY GENE CARRIERS EXCLUDED)

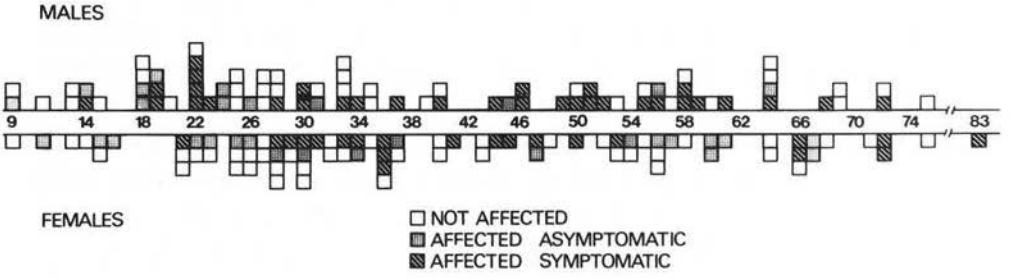

Table 4.6. Number of sibs per age-decade
(probands and obligatory gene carriers excluded)

Decade	Males				Females				Both sexes			
	Affected		Not Affected	Total	Affected		Not Affected	Total	Affected		Not Affected	Total
	sympto matic	asympto matic			sympto matic	asympto matic			sympto matic	asympto matic		
1	0	1	1	2	0	0	1	1	0	1	2	3
2	3	4	6	13	0	3	3	6	3	7	9	19
3	6	3	10	19	3	5	13	21	9	8	23	40
4	5	1	7	13	7	3	8	18	12	4	15	31
5	5	1	1	7	4	1	5	10	9	2	6	17
6	9	1	5	15	2	3	7	12	11	4	12	27
7	3	1	5	9	2	5	4	11	5	6	9	20
8	1	0	2	3	2	0	2	4	3	0	4	7
Total	32	12	37	81	20	20	43	83	52	32	80	164

Table 4.6. gives the numbers of the patients with symptoms, of those without symptoms, and the numbers of the unaffected sibs per age-decade. Joint and muscle pains and inability to whistle were not accepted as diagnostic symptoms. Inability to whistle was never a spontaneous complaint. Only patients without complaints related to muscle weakness are included in the asymptomatic group. There was only one affected female in the ninth decade: she is not considered in this table because the information is too limited to draw any conclusions for this decade.

The relative frequencies of the symptomatic, the asymptomatic, and the not affected sibs are given in the Figures 4.4. and 4.5.. These diagrams will be referred to later in the text.

FIGURE 4.4: PERCENTAGE OF AFFECTED AND NON-AFFECTED SIBS PER AGE GROUP (164 SIBS, BOTH SEXES)

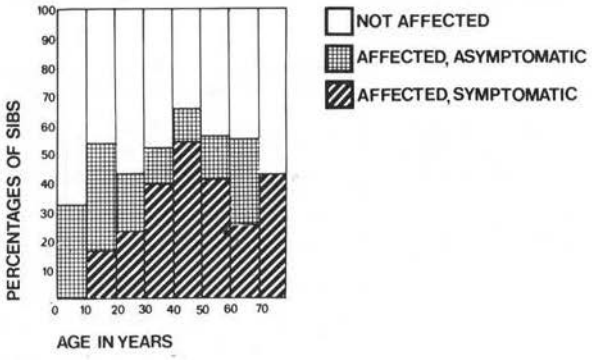

FIGURE 4.5: PERCENTAGES OF AFFECTED AND NON-AFFECTED SIBS PER AGE GROUP (164 SIBS: 81 MALES, 83 FEMALES)

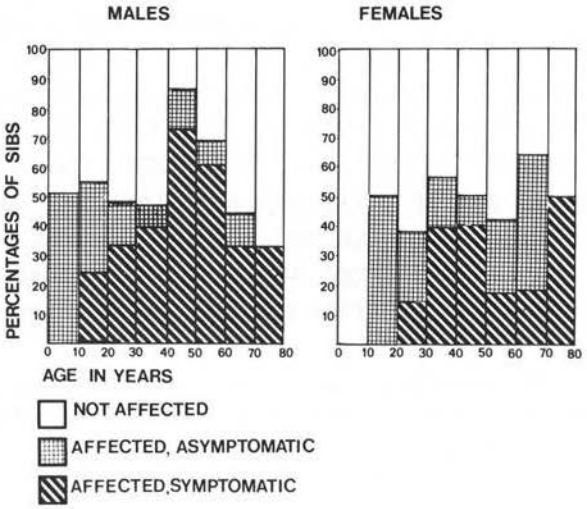

4.3. The kindreds

The pedigrees are shown in the following pages. Details about the ancestors and other parts of the family, not studied by us, will be mentioned briefly if relevant. The living members of the families will be discussed only if they demonstrated remarkable features.

LEGENDA

2
III ■ Affected male ; sib number 2; generation number 3

○ Not affected female

▧ Possibly affected male

◇ Sex unknown

[2] Two males

Childless marriage

Offspring not explored

○=□ Consanguineous marriage

Di - zygotic twins

Proband

S Single

A Asymptomatic

Completely examined by the author

Partially examined by the author

Examined by others

✳ Year of birth

† Year of death

2 Male deceased at the age of 2 years

2m Male deceased at the age of 2 months

2d Male deceased at the age of 2 days

0 Male born dead

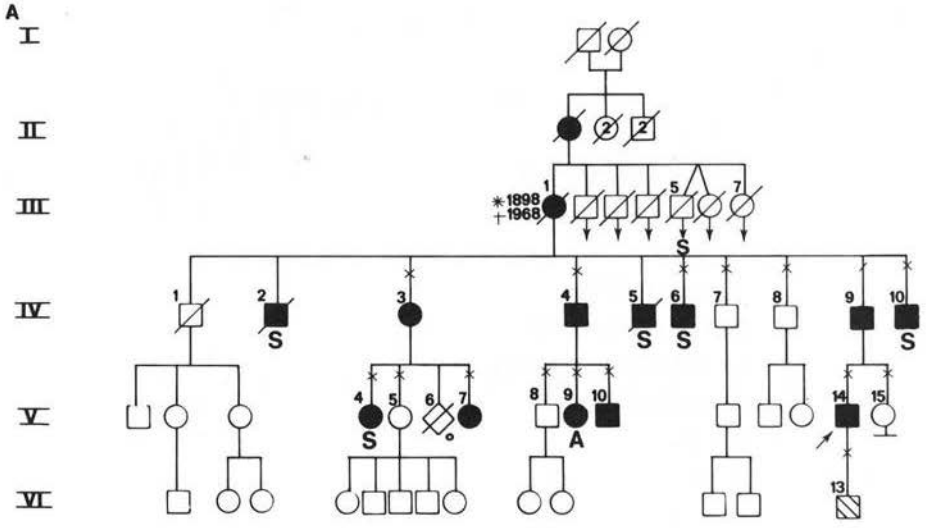

Kindred A: This kindred was ascertained through the proband V 14, who sought genetical advice. A definite diagnosis could not be made in his son (VI 13). II 1 was said to have had shoulder girdle weakness. Nothing is known about her two brothers and two sisters. III 1 suffered from severe pelvic girdle weakness. Her brother III 5 had died in his teens and her sister III 7 had emigrated to the USA: patient IV 3 thought they both had been affected. This could not be confirmed since no one else in the fourth generation had known these persons. Patient IV 10 was quite remarkable because he had severe neck extensor weakness; he could not keep his head constantly upright, which is definitely exceptional in FSHD. There was only one abortive case in his kindred (V 9).

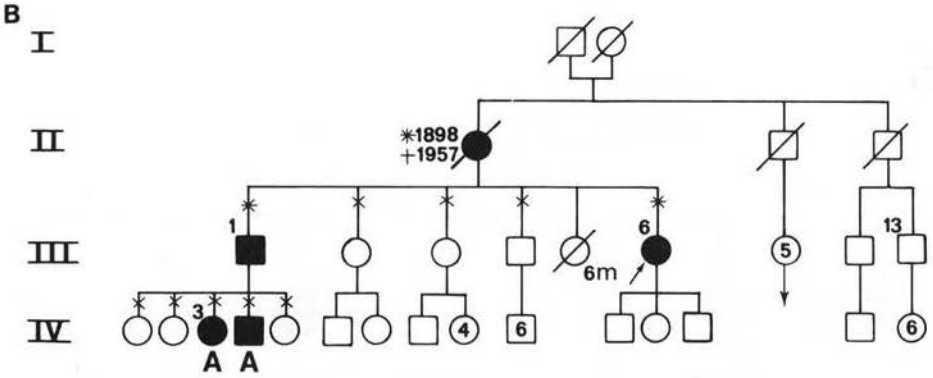

Kindred B: Patient II 1 died at the age of 59 after "a heart attack which was related to her thyroid disease". Details were not available. According to her children and to III 13, her two brothers and her parents were not affected. III 1 and III 6 had been examined ten years previously. At that time no facial weakness was noted; this was clearly present when they were examined by us.

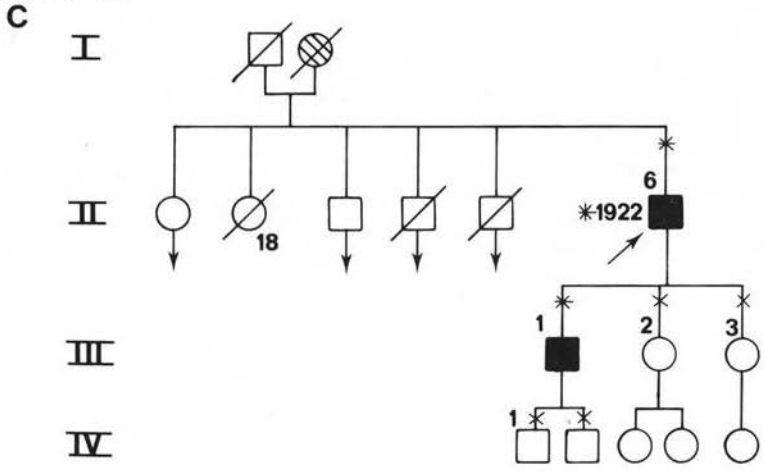

Kindred C: I 2 was an Indonesian woman. Nothing is known about her family. It was said she could not walk properly at advanced age, but II 6 was not sure she was affected. I 1 was a tall and strong professional soldier. The proband's brothers and sisters lived in Indonesia. Nothing is known about them regarding FSHD.

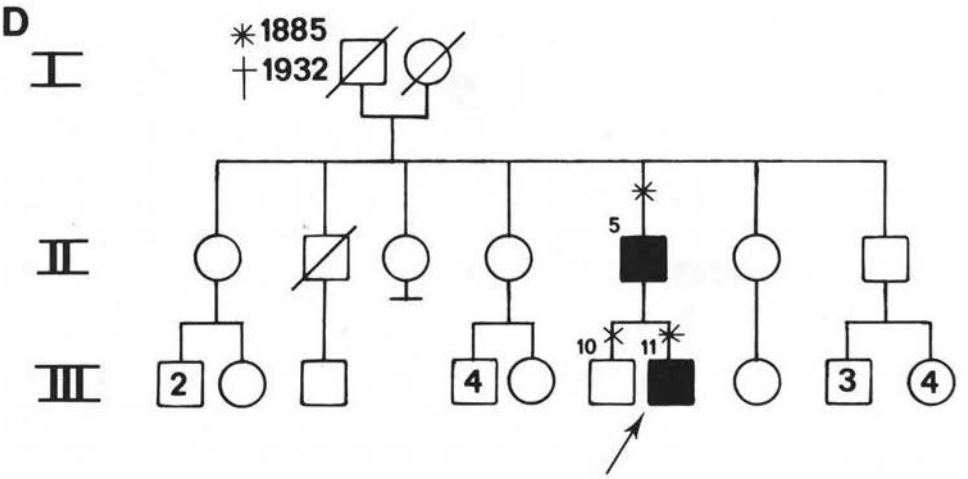

Kindred D: The proband's father (II 5) claimed to be the first one in his family with muscle disease. No one else of his generation could be examined. Biopsy of the right deltoid muscle of the proband (III 11) revealed no abnormalities. EMG of the shoulder girdle muscles showed a myopathic pattern in the left deltoid muscle only. II 5 had chronic heart failure, generalized atherosclerotic vascular disease, and anticoagulation therapy for an aorta bifurcation prosthesis. A muscle biopsy was not performed. The diagnosis in this family therefore, is largely based on clinical and genetic criteria.

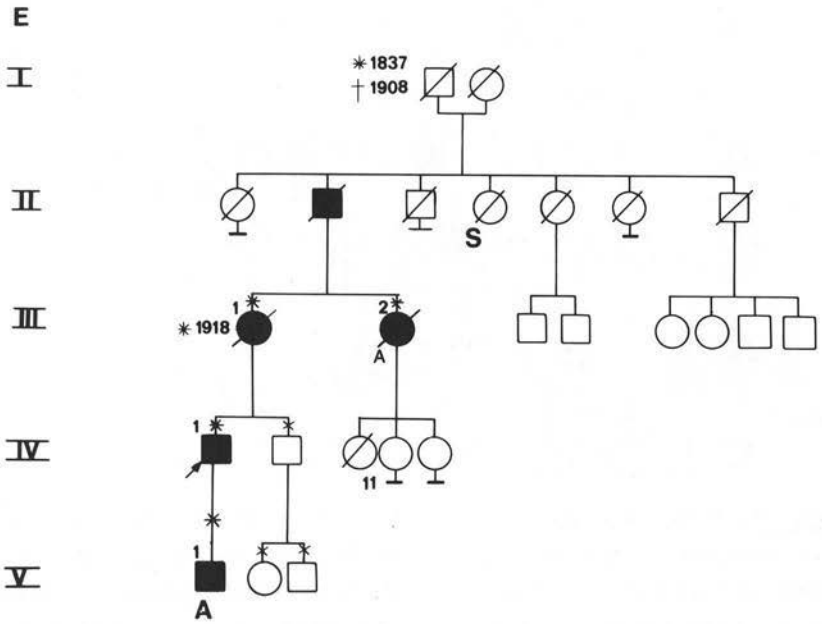

Kindred E: Patient II 2 was said to be the only one of his generation who was affected. His first symptoms became apparent around the age of 25 and were those of foot extensor weakness. His parents had no complaints of muscle weakness. His daughter (III 1) also noted symptoms of foot extensor weakness first. She was 38 years at that time and had never been able to whistle. Two years later she noted shoulder girdle weakness. Her sister had no symptoms but turned out to be affected. In her son (IV 1) the disease manifested by symptoms of shoulder girdle weakness at the age of 16 years.

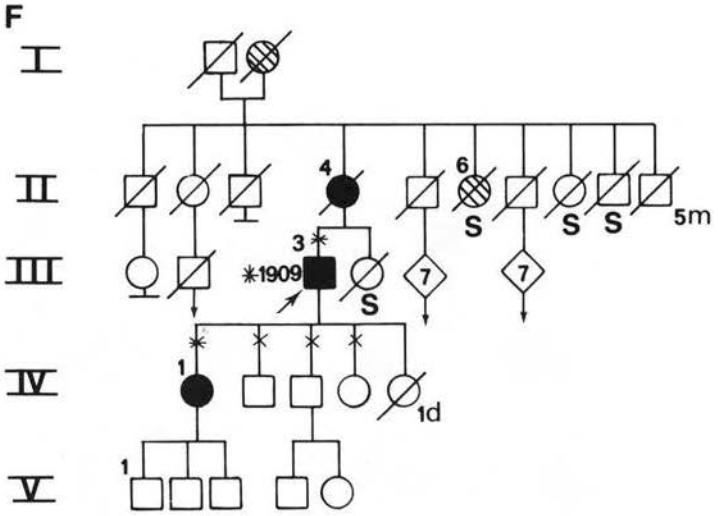

Kindred F: The information given in this pedigree is based on the family records of the probrand (III 3), and could not be checked, because the ancestors came from several small towns in Germany, close to the Dutch border. I 1 was said to have been a strong man, member of the German Imperial Guard. I 2 "missed a muscle in her shoulder" but details are lacking, nor is anything known about her sister and parents. II 4 also missed some muscles in her shoulder, which was noted on an examination for tuberculosis. She had difficulties walking when she became older. Her son is positive that she had the disease and suggested that II 6 was affected as well. The proband (III 3) had a slightly progressive costal gibbus and an impressive thoracic kyphoscoliosis. He could stand upright with an increased lumbar lordosis and flexed hip and knees, but he walked progressively bent forwards since his fifties. On examination he had a waddling gait with a bilateral foot drop and his upper trunk bent to an angle of 45 degrees. He had to hold on to chairs and tables in his house, and to a stick while outside. All his life he had ridden a bicycle and, when this became more difficult, he persuaded his wife to ride a tandem. This most remarkable man, who loved outdoor-life, still drove a car in his seventies and each year spent long summer holidays with his wife camping, sleeping in a tent, in the south of Europe.

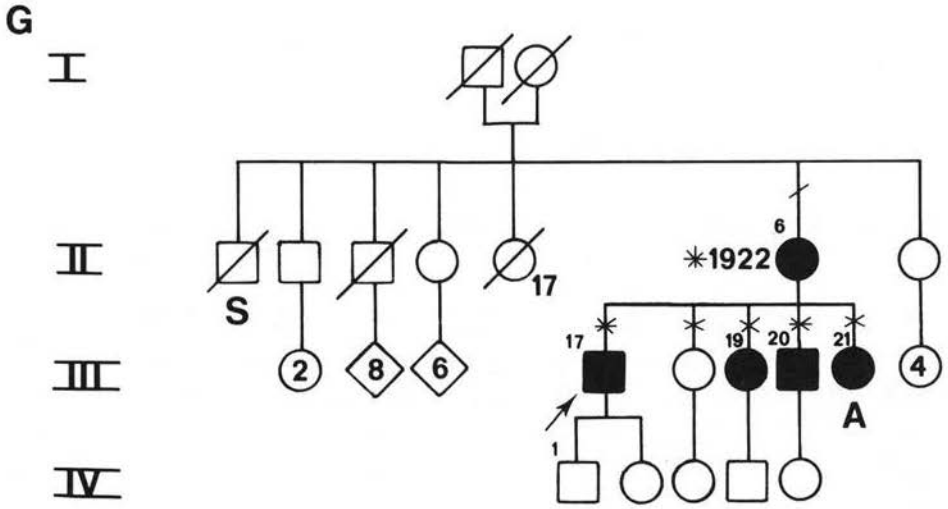

Kindred G: I 1 was a Belgian male who changed his name after his emigration to Indonesia. I 2 was an Indonesian orphan. The family is divided about her being affected or not. The largest part of the family still lives in Indonesia or Malaysia. They are all said to be without complaints. Patient II 6 was reluctant to be examined. She had facial weakness and was unable to raise her arms more than 90 degrees, also showing a right-sided foot extensor weakness.

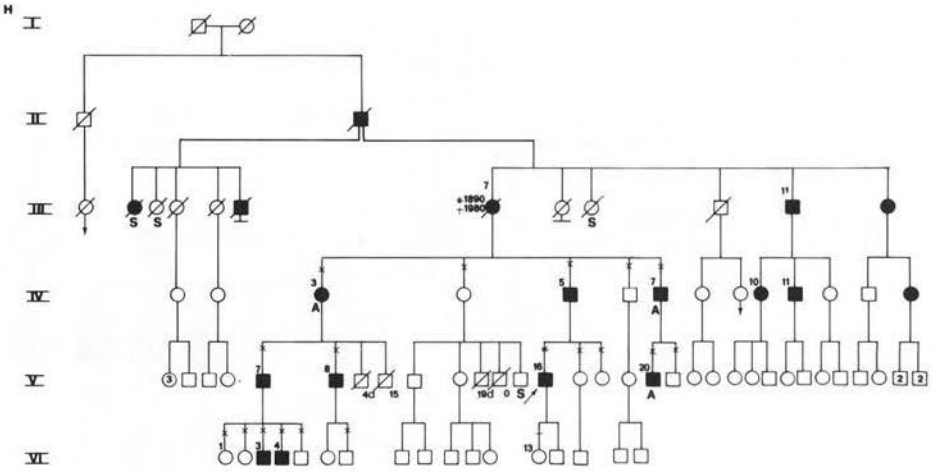

Kindred H: Only the proband (V 16) was so severely affected that he had sought referral to a neurologist. As a child of eight years he was unable to raise his arms above his head. He noted foot extensor weakness at the age of 20 and pelvic girdle weakness when 24 years old. His father (IV 5) developed shoulder girdle weakness at the age of 15. This progressed till he was 21 years old. Then the progression stopped, and on examination at the age of 61 he still had only shoulder girdle and upper arm weakness. There were several abortive cases in this family. IV 7 was minimally affected and will be discussed in detail in section 4.22. V 8 had suffered from a radicular S1 syndrome on the left due to slipped disc, which left him with a distinct paresis and atrophy of the left triceps surae muscle.

Remarkably, in this family facial weakness was generally minimal. IV 5, IV 7 and V 8 had no facial weakness at all. That this was not a rule without exception was demonstrated by III 11 whom we met but who was not examined by us: he showed severe facial weakness.

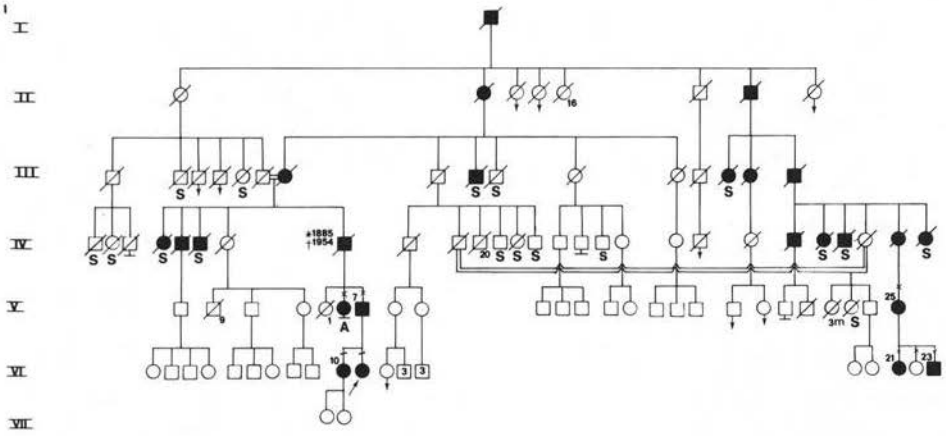

Kindred I: Many members of this family had been rose-growers living in the same village for centuries. Various degrees of severity were reported in the descendants of I 1. Among the members examined, one abortive case (V 6) was found.

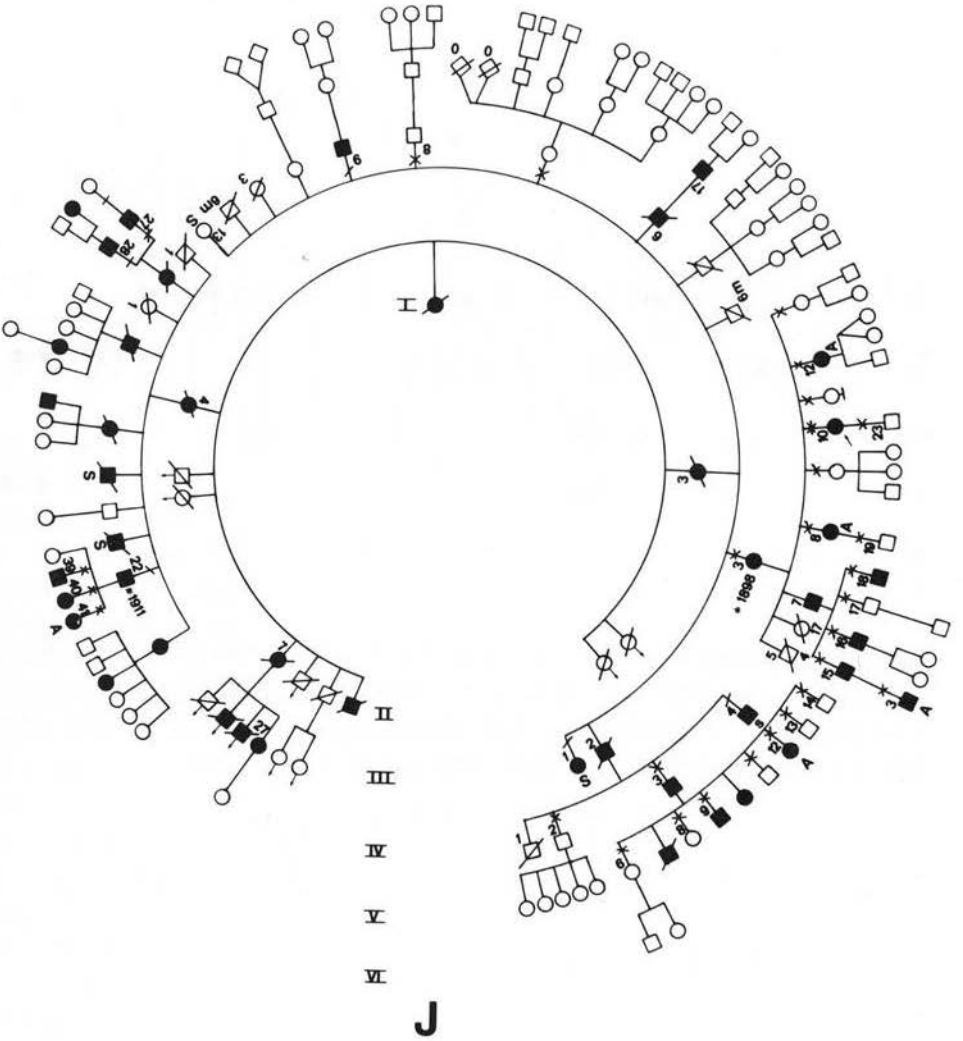

Kindred J: Several members of this kindred have been seen by other physicians in the past. Within this family large differences in the degree of involvement were noted. Asymptomatic patients of older age (IV 8, 54 years; IV 12, 47 years) and young, severely affected persons such as V 18 (22 years) have been seen.

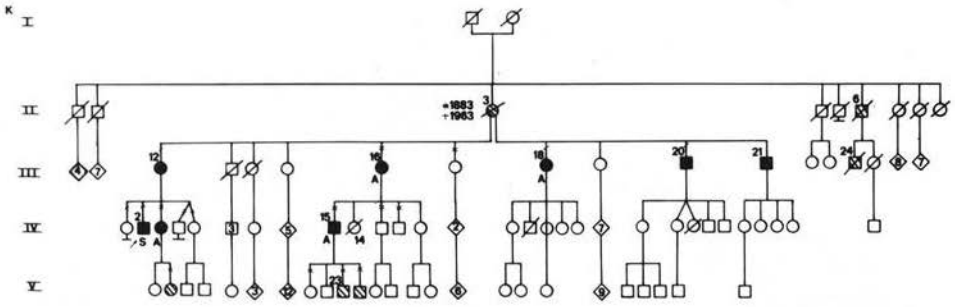

Kindred K: The proband (IV 2) told, when examined in the neuromuscular clinic, that only his half-uncle (III 20) was said to suffer from the same disorder. When visited at his home, his mother was found hanging out the clothes to dry on very low line, walking with a waddling gait and bilateral footdrop. For years she considered herself to suffer from rheumatism. Her sister (III 16) and her sister's son (IV 15) had no complaints and were minimally affected. III 20 refused a complete physical examination since he was very disappointed in his physicians for various reasons. His sister III 18 denied the obvious signs of her weakness and explained the weakness of her arms by fatigue. Neither would cooperate by permitting their children to be examined. All but one of the children of II 3 were definite that their mother was not affected. III 20 and III 19 said that III 24 had suffered from the same disease. They were not sure about II 6.

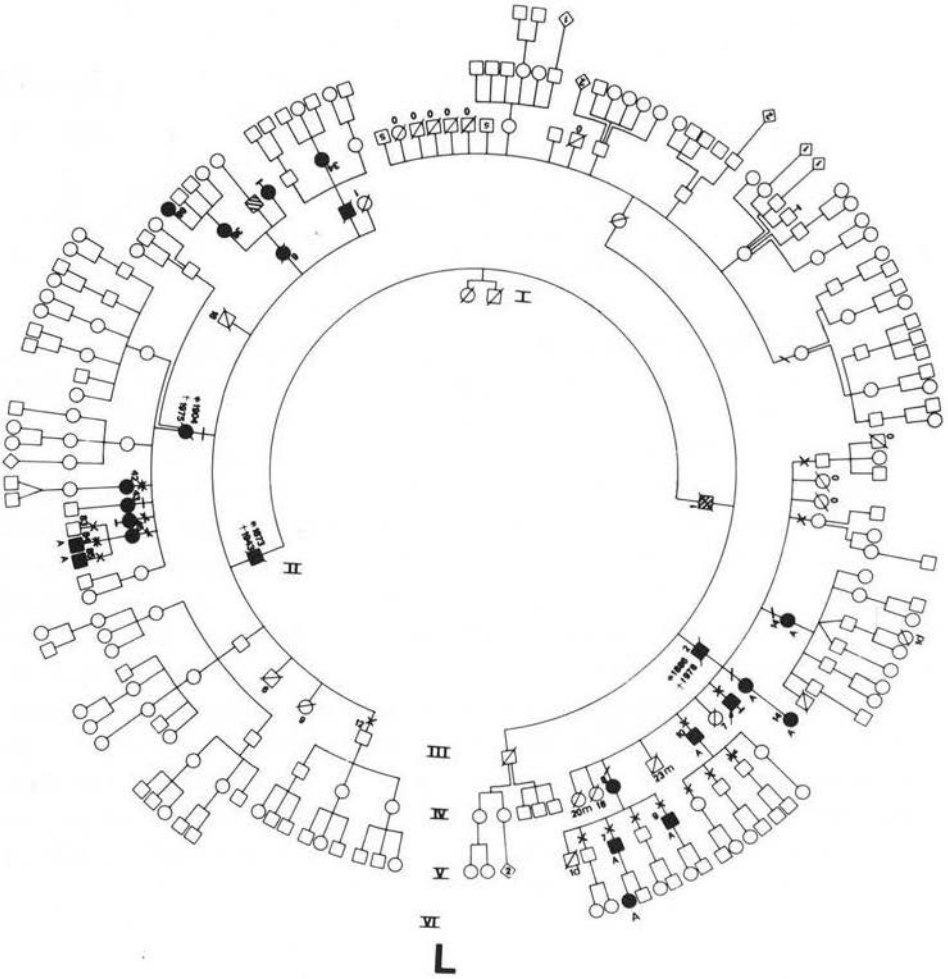

Kindred L: Descendants of I 1 were living in the same town. Their relationship was confirmed by tracing their common ancestor through the records of the registrar's office. The family was uncertain if II 1 was affected. There were many abortive cases in his offspring. Only III 2, IV 8 and IV 12 were symptomatic. Some of the descendants of II 2 could be examined. IV 42, IV 44 and IV 45 were notable because of the presence of ankle contractures.

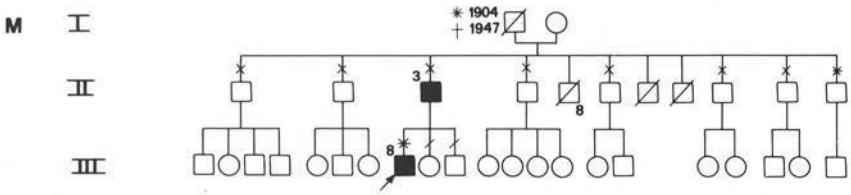

Kindred M: The proband of this kindred will be discussed in detail in section 4.19. on the infantile onset of FSHD. His father (II 3) demonstrated the normal pattern of FSHD. All his uncles appeared healthy. His grandmother (I 2) could not be examined, but was said to be without symptoms relating to FSHD. No muscular disease was known in his mother's family.

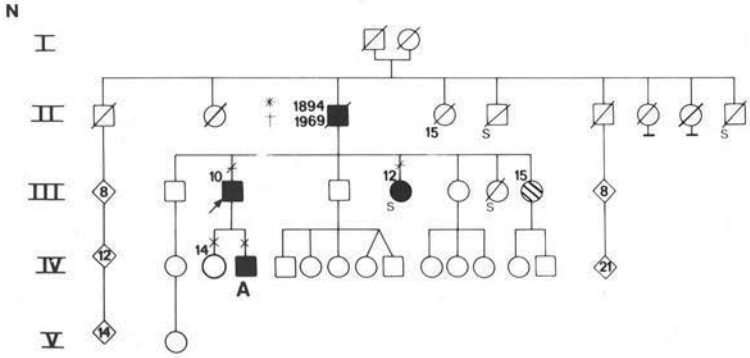

Kindred N: The proband (III 10) of this kindred demonstrated two notable features. Firstly, his calf muscles were rather bulky and slightly paretic (grade 4). Although he had been very muscular when he was young the question of pseudohypertrophy was raised. This will be discussed later. Fasciculations had been noted in the shoulder girdle muscles on a previous examination. We observed no myotonia nor fasciculations. Secondly, a biopsy of the left biceps muscle revealed a great variation in fibre diameter, more than 20% central nuclei, many ring fibres and sarcoplasmic masses, and many moth-eaten fibres. Patient III 12 was a more usual case of FSHD with no special features. A muscle biopsy in this case revealed no abnormalities. III 15 was said to be probably affected. IV 15 was affected but he had no complaints.

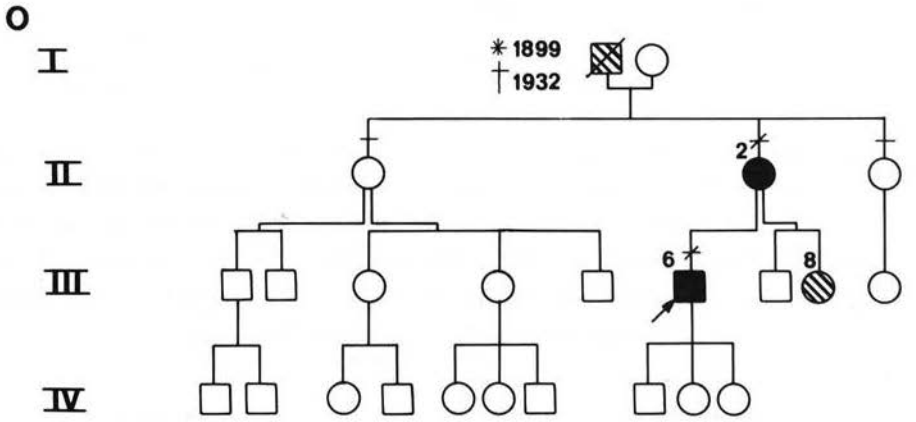

Kindred O: Proband III 6 had had a muscle biopsy. This biopsy could not be reviewed but was said to have demonstrated myopathic features. His half-sister III 8 had a wry mouth. She could not be examined. II 2 demonstrated facial weakness on a photograph at the age of three. It was suggested by the patient that the facial weakness might have been congenital but this could not be substantiated. She developed shoulder girdle weakness at the age of 14 and foot extensor weakness when 24 years old. Subsequently, ankle contractures became apparent and, at the time of examination, she was moderately affected. Her father (I 1) had died at the age of 34 of pneumonia. The family was not sure whether he was affected or not, but his sister had had "a wry face" and his mother a "crooked shoulder". No details on other relatives were available.

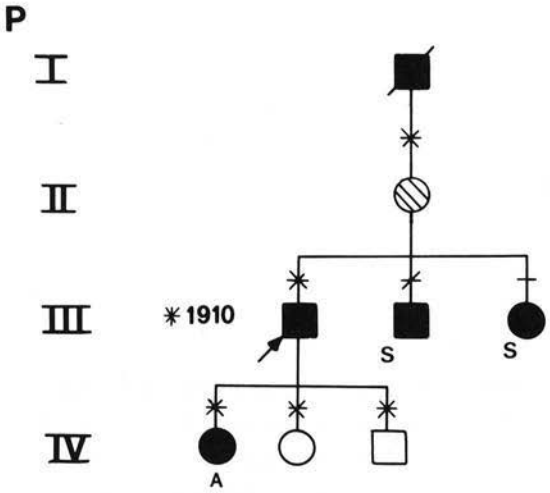

Kindred P: This kindred was particular in that II 1 was asymptomatic and without unequivocal physical findings suggestive of FSHD. She will be discussed in detail in the section on penetrance. Her father was known to have had a muscle disease. She is considered a carrier of the gene, which has not come to expression (yet). III 2 and IV 1 had no facial weakness, while the proband (III 1) had facial weakness with a protruding, immobile upper lip. III 1 showed myopathic features on EMG: he had normal motor nerve conduction velocities. Biopsy of his right biceps revealed small angulated fibres and type 2 predominance. III 2 showed neurogenic features on EMG: biopsy of the right deltoid muscle revealed no abnormalities.

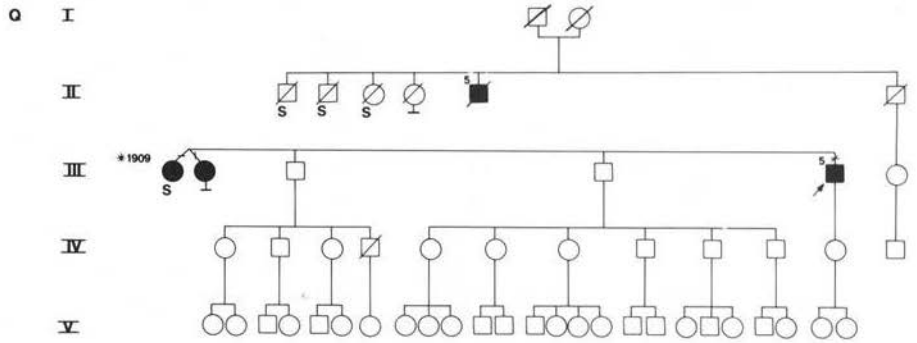

Kindred Q: Proband III 5 was seen at the age of four at the neurological clinic because of shoulder girdle weakness. In his twenties or thirties he developed foot extensor weakness, but no further extension was noted on examination at the age of 52. At that time he had minimal facial weakness. Sensory examination had always been normal in the past. Diabetes mellitus was noted when he was 43 years old. Several years later, at the age of 50, he developed a mixed polyneuropathy. EMG of the lower legs, with slowing of the nerve conduction velocities, supported this diagnosis. EMG of the proximal arm muscles revealed a myopathic pattern. A muscle biopsy was refused. His sister (III 1) was noted to have facial weakness at the age of five. She developed shoulder girdle weakness when eight years old and was unable to walk unsupported at the age of 21. Her non-identical twin sister, III 2, noted shoulder girdle weakness when 20 years old and foot extensor weakness at the age of 48. When she was examined at the age of 72, she was unable to walk outside but she walked unaided at home. In both, sensory examination revealed no abnormalities. Both sisters refused a muscle biopsy. The father of these patients (II 5) had clearly been affected. He was said to have been able to walk for hours at the age of 60 years. He lived to be 86 years old and only in the last years of his life he was unable to stand up by himself. This family has been included in this study largely on the basis of clinical criteria like facial onset, the pattern of weakness on examination, and the course of the disease, and on the basis of the genetic criterion of autosomal dominant inheritance.

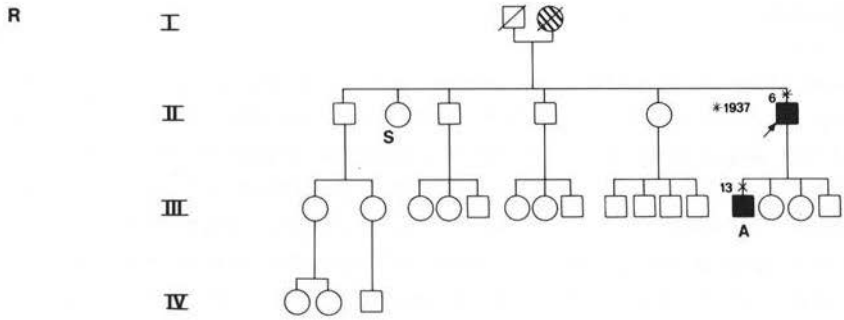

Kindred R: Proband II 6 was said to be the only one in his family with muscle disease. Only one of his four children, III 13, was examined: he was asymptomatic but physical examination demonstrated shoulder girdle weakness and atrophy. The facial muscles were not involved in this case. Photographs of the proband's mother were suggestive of facial weakness.

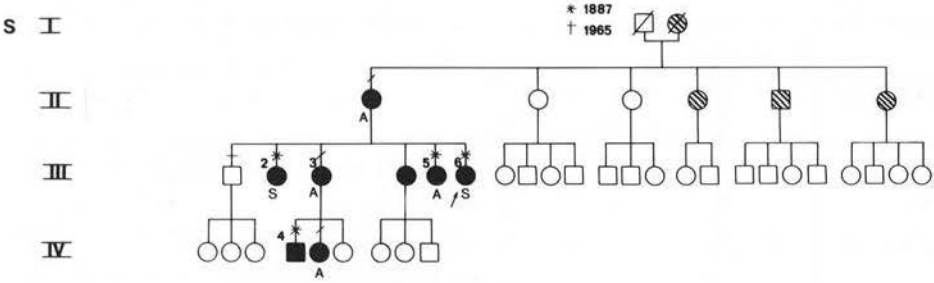

Kindred S: This pedigree is characterized by a considerable number of asymptomatic cases. The proband III 6 and her eldest sister III 2 both had slight ankle contractures and a rather severe facial weakness. A visit at home revealed that their mother (II 1) had facial weakness as well: she could not be examined in detail. A photograph of I 2 also suggested facial weakness. III 2, an intelligent woman and good observer, suggested on relevant grounds that other members of the family might be affected as well. These persons could not be examined.

4.4. Symptoms

Among the 107 affected persons, 73 were symptomatic (46 males and 27 females). The presenting symptoms are given in Table 4.7.. It is important to note that symptoms suggestive of pelvic girdle onset were not observed. In the majority of cases (82%) the presenting symptoms were those of shoulder girdle weakness. Only seven patients (10%) remembered events indicating early facial weakness (Table 4.8.). Most people could not answer

Table 4.7. Presenting symptoms in 73 symptomatic cases of FSHD.

	Facial weakness	Shoulder girdle weakness	Foot extensor weakness	Total
Males	2 (4%)	42 (91%)	2 (4%)	46 (100%)
Females	5 (18%)	18 (67%)	4 (15%)	27 (100%)
	7 (10%)	60 (82%)	6 (8%)	73 (100%)

Table 4.8. Observations indicating facial weakness being the presenting symptom of FSHD.

Patient	Sex	Age of observation	
F IV 1	F	7	Noticed mouth asymmetry in mirror herself.
I VI 11	F	6	Orbicularis oculi weakness noted by ophthalmologist consulted for spectacles.
I VI 21	F	6	Unable to blow up balloons.
J V 16	M	5	Unable to blow up a balloon in a competition.
K IV 2	M	6	unable to close his eyes while asleep.
O. II 2	F	3	Weakness of the orbicularis oris noted by family.
Q III 1	F	5	Her teacher observed that "she could not really smile".

questions about blowing up balloons or drinking through a straw because, as they said, they had never tried it. Inability to whistle is probably strongly suggestive of facial weakness, but the precise significance of this symptom is not clear. We observed inability to whistle in several elderly non-neurological patients who had no facial paresis and who could pout their lips. On the other hand, all medical students in a class of 50 and all unaffected persons in the families studied could whistle. Twenty-seven males (59%) and 18 females (67%) i.e. 45 (62%) symptomatic patients had never been able to whistle (Table 4.9.). At the time of examination 33 males (72%) and 23 (85%) females i.e. 56 (77%) symptomatic patients were unable to whistle. Ten other males and four females could whistle softly and with a twisted, asymmetric mouth. When the asymptomatic patients were asked about these symptoms it was found that one out of 13 males (8%) and eight out of 21 females (38%) had never been able to whistle. Although the average age of the symptomatic patients (45.3 years) was slightly higher than that of the asymptomatic patients (36.3 years), no conclusions can be drawn from these figures about the onset and progression of the disease in the asymptomatic cases since both are quite variable and independent of each other, as can be concluded from the symptomatic cases. Still it is noted that 54 of 107 patients (51%) never had been able to whistle, and that 67 of the 107 patients (63%) were unable to whistle at the time of examination. Although inability to whistle as a symptom

Table 4.9. Inability to whistle as a symptom of facial weakness.

	Symptomatic patients			Asymptomatic patients		
	Males	Females	Total	Males	Females	Total
Never been able to whistle	27	18	45	1	8	9
Lost the ability to whistle	6	5	11	0	2	2
Could whistle with:						
moderate facial weakness	4	2	6	2	5	7
mild facial weakness	6	2	8	8	5	13
no facial weakness	3	0	3	2	1	3
Total	46	27	73	13	21	34

of facial weakness may yield false positive findings and a substantial number of false negative findings it still may give an important hint as to who might be affected. Another, though rarer, symptom which we found more reliable is the inability to close the eyes completely while asleep: this always indicates weakness of the orbicularis oculi muscles. We never observed false positive findings.

Initial complaints relating to shoulder girdle weakness were inability to keep the arms sustained above shoulder level in various tasks. Pain in the shoulder region was not accepted as a diagnostic symptom of FSHD because it did not appear specific for it. However 21 symptomatic patients (28%) and three asymptomatic patients (9%) i.e. a total of 24 patients (22%), had suffered episodes of shoulder pains. One asymptomatic patient (L V 9) related pains in his right shoulder to his heavy work in the harbour of Rotterdam. The right shoulder girdle was more affected than the left on physical examination. In another asymptomatic patient (H IV 3) the pains in her left shoulder had been diagnosed as "frozen shoulder". She indeed had slight limitation of passive movement in the shoulder joint. The third asymptomatic patient (H V 20) had noted several episodes of shoulder pains, lasting hours. In four patients (D II 5, F IV 1, G III 19, S IV 4) the pains were thought to be related to the onset of the disease. Three patients(E III 1, I VI 23, J IV 27) had noticed episodes of shoulder pains lasting several days, followed by an exacerbation of the shoulder girdle weakness. Nine patients (A V 10, B III 6, C III 1, I VI 10, I VI 11, L IV 45, L V 80, N III 10, S III 2) were positive about a relation between shoulder pains and physical exertion in which the arms are used. Two patients (K III 12 and Q III 2) frequently had muscle and joint pains not clearly related to exercise. Three patients of old age (J III 1, J III 3, Q III 1), wheelchair-bound and dependent on nursing care, complained of severe muscle and joint pains upon being turned in bed, dressed, or lifted. Only in the last cases the explanation offered by Ketenjian (1978), who claims that stretching of tendons and weakened muscles causes pain, seems appropriate.

Six patients (Table 4.7.) presented symptoms related to the lower legs. Two men (B III 1, L IV 12) and one woman (E III 1) claimed they had foot extensor weakness only: they were not examined at that time. The son of E III 1 is positive that his mother had shoulder girdle weakness as well at that time, but she denied this. Three other women (L IV 42, L IV 44, S III 6) had both ankle contractures and foot extensor weakness at the time of first complaints. The ankle contractures contributed strongly to an early referral. When examined they all demonstrated shoulder girdle weakness as well.

4.5. Precipitating factors

Specific events precipitating the onset of the disease were not reported, nor was it possible to identify any. One patient (J VI 4) strongly believed that heavy labour and the preferred use of his right arm resulted in the severe atrophy and paresis of the right arm which was distinctly more seriously affected than the left.

Two patients (A V 14, F III 3) confirmed to notion that immobilisation in plaster casts has an adverse affect on the progression of the disease. Both had sustained a humerus fracture, and on mobilisation they noted a loss of muscle mass and strength in the upper arm that could not be regained by exercise. It is conceivable that immobilisation could elicit a first sign of the disease.

4.6. Presenting signs

Records on the clinical conditions made within a couple of years after the onset of symptoms were available only in a few cases. We saw only four patients (all males) within five years after the onset of their symptoms (Figure 4.2.). Assuming that sooner or later, with progression of the disease, the asymptomatic patients might become symptomatic, it was felt that

studying the signs in the asymptomatic patients could provide insight into the presentation of FSHD. Knowledge of the presentation is important in the discussion of the differential diagnosis. Table 4.10. shows the signs in the 34 asymptomatic patients. Facial weakness was the only sign in eight patients but in three women the shoulder girdle muscles could not be inspected for atrophy. Facial weakness was absent in two males and one female, i.e. in approximately 9% of the asymptomatic cases, which suggests that the majority of patients with FSHD will have facial weakness at the time of first symptoms.

Any combination of shoulder girdle weakness with facial, foot extensor or pelvic girdle weakness was observed. Foot extensor weakness was invariably minimal. Otherwise, obviously it would have led to complaints. Pelvic girdle weakness was present in two cases. Although unlikely, it is conceivable that pelvic girdle weakness could give rise to presenting symptoms in FSHD. In those cases, shoulder girdle weakness might be expected as well, but the correct diagnosis might be difficult if the family history is lacking. The frequency (12%) of pelvifemoral onset among the 95 cases of Chung and Morton (1959) is inconceivably high and raises suspicion that other disorders, such as spinal muscular atrophies, might have been included in their material, which could account for their remarks on genetical heterogeneity of the disorder under study.

table 4.10. The signs in 34 asymptomatic patients with FSHD.

	F	S	FS	SE	FSE	FSP	FSEP	Total
Males	1	1	7	1	2		1	13
Females	7	1	7	0	5	1		21
	8	2	14	1	7	1	1	34

F: Facial weakness; S: shoulder girdle weakness; E: foot extensor weakness; P: Pelvic girdle weakness.

4.7. The facial muscles

The facial muscles were examined as suggested by Kendall et al. (1971). No grading system was used for facial weakness. Facial weakness was the sole finding in eight cases (Table 4.10.), and was present in 101 (94%) out of the 107 patients. This percentage is higher than Becker's 81% (1953) and Chung and Morton's 83% (1959). Facial weakness was absent in three of the 34 asymptomatic cases (9%) and in three of the 73 symptomatic patients (4%). These percentages suggest that facial weakness can arise later in the course of the disease and are not contrary to the observation that B III 1 and B III 6 had no facial weakness ten years ago (according to their physician at that time) but did, when examined by us.

A remarkable finding is the frequent asymmetric involvement of the facial muscles (Table 4.11.). Occasionally, the orbicularis oculi muscle was weaker on one side and the orbicularis oris muscle weaker on the opposite side: this is referred to as "crossed asymmetry" in Table 4.11. Fifty-four patients had facial asymmetry which is 57% of all patients in whom the symmetry was judged and recorded. There was no preference for the right or left side, nor for males or females. It is not clear why and how facial asymmetry should develop. The jaws are often used asymmetrically in chewing and biting but these muscles are spared in FSHD. Several facial expressions require an asymmetric use of muscles but it is hard to understand how this could lead to asymmetric weakness and atrophy.

Table 4.11. Facial weakness in 101 patients with FSHD.

	Predominantly right-sided weakness	Predominantly left-sided weakness	Asymmetry crossed or not specified	Symmetric weakness	Weakness not specified	Total
Males	13 (24%)	11 (20%)	6 (11%)	18 (33%)	6 (11%)	54 (100%)
Females	9 (19%)	7 (15%)	8 (17%)	22 (47%)	1 (2%)	47 (100%)
	22 (22%)	18 (18%)	14 (14%)	40 (40%)	7 (7%)	101 (100%)

Three or more generations of abortive cases do occur (Pamboukis, 1931; our family S) but facial weakness without a clear autosomal dominant pattern of inheritance is not enough to make the diagnosis FSHD. We observed, in two years time, five (two males, three females) unrelated persons with weakness of the orbicularis oris muscle, who were referred to us for neurological problems not related to neuromuscular diseases. Both the men were aware of it because they never could whistle well, and they claimed it had not been progressive since their early youth. However, one of the males claimed his sister had a similar paresis. Neuromuscular disorders in any of the five families were reportedly not present, but these families could not be studied. Speculations that these five patients might be part of a large source of asymptomatic families with FSHD cannot be denied with certainty, although another explanation, such as congenital aplasia of the orbicularis oris muscle, seems more appropriate in these patients, as is properly illustrated in Mumenthaler's Atlas (1982).

4.8. The shoulder girdle, pelvic girdle and limb muscles

In 74 patients (46 males and 28 females; see Table 4.1) all muscles, indicated in Table 4.12., could be examined using methods as described by Kendall et al. (1971) and as published in the Medical Research Council (MRC) memorandum No. 45. All muscles were graded for their strength from 0 to 5 according to the MRC scale. The gradings of each muscle for all patients were added. The maximum score that could be reached for each pair of the same muscles on the right and on the left side was 740. Table 12 shows the percentages of the maximum score observed for each muscle pair. It is appreciated that grading of muscles around the shoulder joint may be difficult if the fixation of the scapula has weakened or is lost. In those instances, fixation was attempted by the examiner's hand. The teres major muscle was tested in two ways, by adduction of the upper arms and by having the arms internally rotated. Both tests are combined effort of

several muscles and the total score has to be interpreted with caution.

The group of 33 partially examined patients (see Table 1) included several seriously affected persons. The scores in Table 12, therefore, do not reflect the severity of the disease in the total group of patients. Four patients with facial weakness only were included in the group of completely examined patients.

The muscles were arranged in an ascending order of their scores. The truncal muscles could not be graded according to the MRC system. Their place in Table 12 will be discussed in section 4.9. Assuming a steady progression of the muscular weakness once a muscle has become affected, this transverse section gives a rough estimate regarding the order in which the muscles become involved in FSHD. The individual differences which are known to occur, are expected to level out in this large sample. Therefore, one should not adhere to this order rigidly, but it should be noted that the sequence of this transverse section is in agreement with the general picture of spread of disease based on anamnestic data (longitudinal section). Since we did not perform a longitudinal study, these data are the best available.

For the purpose of this study the muscles were grouped. Each group suggests a stage in the course of this disease. Each stage is marked by the onset of recognisable symptoms and signs. It is suggested in Table 4.12., that the scapular fixators, the latissimus dorsi, and the pectoralis major muscles are among the first to become affected. Involvement of these muscles and involvement of the facial muscles constitute the first stage of the disease. The onset of the second stage is marked by the involvement of the anterior tibial muscles. The peroneal muscles become affected later in this stage. In the shoulder region other muscles such as the infraspinatus, the supraspinatus, the teres major and, finally, also the deltoid muscles become involved. In the upper arms the triceps appears to be involved first, followed by the biceps. The lower arm muscles are notably spared in this stage. The brachioradialis muscles become involved in the third stage of the disease in this material, which is in contrast to the findings of Tyler and Stephens (1950), who noted an

Table 4.12. Mean scores of strength of muscles in 74 patients with FSHD (scores in percentages of the maximum score obtainable).

	Rhomboids	55
	Lower trapezius	59
Stage 1	Pectoralis major (sternocostal head)	63
	Serratus anterior	65
	Pectoralis major (clavicular head)	68
	Latissimus dorsi	74
	Abdominal Muscle Weakness	not scored
	Tibialis anterior	74
	Infraspinatus	76
	Triceps brachii	77
	Supraspinatus	78
	Teres major	79
Stage 2	Peroneus longus and brevis	79
	Extensor hallucis longus	80
	Extensor digitorum longus	81
	Extensor digitorum brevis	82
	Biceps brachii	83
	Deltoid (medial belly)	86
	Deltoid (anterior belly)	86
	Hyperlordosis	not scored
	Iliopsoas	89
	Brachioradialis	91
	Glutaeus medius and minimums	91
	Quadriceps femoris	92
Stage 3	Upper trapezius	93
	Adductors	93
+	Wrist extensors	93
	Neck flexors	94
	Glutaeus maximus	94
Stage 4	Hamstring muscles	94
	Sternocleidomastoid	96
	Finger extensors	96
	Triceps surae	97
	Wrist flexors	97
	Finger flexors	97
	Intrinsic hand muscles	98
	Neck extensors	99
Stage 5	Ambulatory indoors, unable to climb stairs. In wheelchair while outside.	
Stage 6	In wheelchair indoors. Dependent on nursing care.	

early involvement of these muscles in their patients

The third stage of the disease is marked by the start of involvement of the pelvic girdle and thigh muscles. Late in this stage the upper trapezius muscles, the neck flexors and the wrist extensors become involved. The relatively late involvement of the neck flexors in these patients is in agreement with observations made by Van Wijngaarden and Bethlem (1973).

The fourth stage is essentially characterized by progressive pelvic girdle weakness, leading to progressive disability. We would like to mark the onset of stage 4 with the loss of ability to climb stairs. Also in this stage there is further extension of the disease to the lower arms. Finally, the triceps surae and the neck extensors become involved.

We marked the onset of the fifth stage at the moment the patient became dependent on a wheelchair for all outdoor activities. The last stage, stage 6, covers the period a patient is wheelchair-ridden at home too; this always implies dependence on nursing care.

In our material the deltoid muscle did not appear so uniformly spared as is suggested in the literature (Brooke 1977). Table 4.13. shows that 40 patients of the 74 that could be examined completely, demonstrated weakness of the deltoid muscles. Distinct atrophy was present in 25 patients (34%). The pattern of atrophy was quite different from patient to patient, and different patterns were found within families. There is no good explanation for the partial atrophy of this muscle. Hypertrophy of the deltoid muscle was never observed.

Recent publications about thoracoscapular fusion (Copeland and Howard, 1978) and scapular fixation (Ketenjian, 1978) in FSHD have directed special interest towards the deltoid muscles. We repeatedly observed in mildly affected patients that the scapulae rose higher if abduction of the arms was resisted by the examiner. This suggests that the rise of the scapulae into the normal position of the trapezius muscles on abduction of the arms is, indeed, the result of the relatively strong deltoid muscles, pulling on the scapulae that have lost their muscular fixation to the chest.

There was only one patient in this material in whom scapular fixation was attempted (K IV 2). The sutures broke after several months. He was not operated upon again.

4.13. Deltoid muscle involvement in 74 patients with FSHD.

	Whole muscle atrophy	Proximal atrophy all bellies	Anterior belly atrophy	Posterior belly atrophy	Paresis no atrophy	No atrophy normal function	Total
Males	4	8	0	2	8	24	46
Females	1	5	1	4	7	10	28
	5 (7%)	13 (18%)	1 (1%)	6 (8%)	15 (20%)	34 (46%)	74 (100%)

4.9. The truncal muscles

The MRC scale does not provide adequate grading for the truncal muscles. The only test for the abdominal muscles used in this study consisted of asking the patient to try to come to a sitting position, while lying supine, without the use of the arms. Table 4.14. shows that 43 patients (58%) had abdominal muscle weakness. Seven patients had abdominal muscle weakness without foot extensor weakness, while the opposite was found in two patients. Abdominal muscle weakness thus appears to be a fairly early sign in FSHD. Under the same conditions as applied for the interpretation of Table 4.12., abdominal muscle weakness might be placed on the border between the first and second stage. A protruding abdomen, which is a rather subjective finding on the examiner's part, was scored separately. Forty-one patients with abdominal muscle weakness on the test had a protruding abdomen. Two patients with a protruding abdomen had no abdominal muscle weakness while tested.

Lumbar hyperlordosis is also a rather subjective finding. Since it probably reflects a compensatory mechanism for the pelvic tilt due to both an increasing abdominal muscle weakness and a hip extensor weakness, one might expect to note an

increased lumbar lordosis at the beginning of the third stage when a certain degree of abdominal weakness has developed and pelvic girdle weakness becomes apparent (Table 4.14.). It is possible that the strength of the iliopsoas muscle was recorded lower in a few cases because an increase of the lumbar lordosis, due to a lack of compensatory mechanisms of the abdominal muscles, was not taken into account. Still it is felt that this would not have a great influence on the sequence of muscle involvement, as suggested in Table 12.

Table 4.14. Involvement of truncal muscles as compared to pelvic girdle and foot extensor involvement in 74 patients with FSHD.

	Abdominal muscle weakness	Foot extensor weakness	Pelvic girdle weakness	Lumbar hyper-lordosis	All patients
Males	29	23	19	18	46
Females	14	15	10	9	28
	43 (58%)	38 (51%)	29 (39%)	27 (36%)	74 (100%)

4.10. Asymmetry of muscle involvement

Becker (1953) noted that the shoulder girdle muscles on the right side were significantly (P2 = 0.03 sign test) more severely affected than those on the left side in his patients. We considered asymmetry to be present if the strength of similar muscles on the right and left side differed one degree or more on the MRC scale, if either side was graded 4+ and the other 4- on the MRC scale, or if there was a distinct difference in muscle atrophy. A preference for right-sided shoulder girdle or arm weakness was observed in 39 patients (Table 4.15.). In 17 the left side was more involved. Twelve patients had some muscles on the right side and others on the left side that were more involved than the corresponding muscles on the opposite side. The preference for the right shoulder or arm was statistically significant (P1 = 0.005 sign test). No such preference was found

in 72 patients with pelvic girdle or lower extremity involvement. In 13 of these patients the right leg or the right side of the pelvis showed more involvements and 16 patients were more affected on the left side. An alternating picture was present in one patient, 19 patients had a symmetrical clinical picture, and in 23 patients definite data on laterality were lacking.

Table 4.15. Preference of side of shoulder girdle involvement in 107 patients with FSHD.

	Right side	Left side	Alter-nating	Symmet-rical	Facial weakness only	Limited data	Total
Males	24	10	8	8	1	8	59
Females	15	7	4	9	4	9	48
	39	17	12	17	5	17	107

We scored arbitrarily right arm and left leg preference each + 1, and left arm and right leg preference each - 1. Symmetric involvement, no involvement or alternating involvement of several corresponding muscles on similar girdles or extremities were scored 0. Adequate data for scoring were present in 77 patients (see Table 4.16.). The total score of all individuals was +22, which proved to be statistically significant when compared to the

Table 4.16. Scores of laterality of muscle involvement in 77 patients

Scores		Arms -1	Arms 0	Arms +1	
L	-1	1	5	7	13
E	0	11	16	21	48
G	+1	3	7	6	16
S					
		15	28	34	77

variance of scores between the individuals (P2 = 0.01 Student's

test), indicating that the preference of involvement of the right shoulder and upper extremity was not related to a preference for the right side of the body.

Variance analysis of the score per kindred demonstrated a significant influence of the kindred on the score (P = 0.02 Fisher's F-test) and no significant influence of the individuals (P = 0.2 Fisher's F-test).

The results so far were rather surprising and we had no information on handedness of the patients at the end of our investigation. Therefore, we sent questionnaires to all patients, asking them if they considered themselves right- or left-handed. In addition we asked them which hand was used for writing, throwing a ball, dealing cards, brushing teeth, and eating soup. Forty-three patients of the 56 patients with asymmetry of shoulder girdle or arm involvement responded (Table 4.17.). All patients had a clear preference for one arm: no ambidexterity was reported. The association between the side of most involvement and handedness was tested in a four-fold contingency table yielding a one-sided tail probability of 0.01.

Table 4.17. Preferred side of shoulder and arm weakness and handedness in 43 patients.

		Preferred side		Total
		Left	Right	
Handedness	Left	3	1	4
	Right	8	31	39
Total		11	32	43

Because we used several statistical tests on the item of laterality, a correction had to be made for the critical level of the tail probabilities. The main factor determining this level for a total of mutually independent tests is the number of tests involved. We therefore fixed our probability of an error of the first kind at 0.0125 for each of the four tests performed. This requirement was not met by the test on the influence of the kindreds only. We therefore would like to conclude that the right

shoulder girdle and arm were significantly more often more seriously involved than the left; this asymmetry was not related to body side but was associated significantly with handedness.

4.11. Reflexes

The myotatic reflexes were spared in all cases with the disease limited to the shoulder girdle muscles (stage 1). With further spread the myotatic reflexes were lower and ultimately absent. Absent myotatic reflexes were not necessarily related to severe involvement. Asymmetry in myotatic reflexes was often but not always related to asymmetry of muscle involvement.

The myotatic reflexes of the legs tended to be spared longer than those of the upper arms. The Achilles' tendon reflex disappeared in several cases without signs of involvement of the calf muscles, while the opposite, i.e. foot flexor weakness with positive ankle jerks, was never observed. The knee jerk was often preserved till late in the course of the disease, but any suggestion of an order of disappearance of the myotatic reflexes was opposed by numerous observations to the contrary. The plantar responses never were pathological.

4.12. Muscle contractures

Muscle contractures were indeed quite rare in our material, with the exception of ankle contractures, which were found in ten patients (one male, nine females) out of 102 (10%) that could be examined for this feature. In three female patients (L IV 42, L IV 44, S III 6) ankle contractures gave rise to the first symptoms. In three other females (L IV 45, O II 6, S III 2) ankle contractures developed in the course of lower leg involvement. The male patient (M III 8) and three females (E III 1, J III 3, Q III 1) were all in an advanced stage of the disease and completely dependent on wheelchairs. Achilles' tendon elongation has been performed in two patients (L IV 44, Q III 1), both with

poor results and no subjective improvement of the patients' conditions.

A pronation contracture of both lower arms was present in E III 1. Patient M III 8 had a flexion contracture of his right arm, limitations of movement of both wrists, and flexion contractures of both hips and knees, in addition to the abovementioned ankle contractures.

The left sternocleidomastoid muscle was transected in patient L IV 42 at the age of 12 years because of a progressive torticollis. At the time of examination she was unable to bend her head completely laterally to the right. The left sternocleidomastoid muscle was absent, but the left trapezius and scaleni muscles appeared tight and contracted. Rotation to the right was minimally impaired. Anteflexion and retroflexion of her head were unimpaired.

4.13. Hypertrophy of muscles

Hypertrophy of muscles was rarely observed. One patient (M II 3) had hypertrophy of the infraspinatus muscles. Two patients (A V 10 and S III 6) had a remarkable hypertrophy of the extensor digitorum brevis muscles as described by Brooke (1977). These muscles tend to be spared for a long time and were found to be absent only in the severely affected patients confined to bed and wheelchair. Hypertrophy of these muscles apeared to be a transient phenomenon in the course of FSHD in some patients and a compensatory mechanism for a footdrop.

Hypertrophy of the calf muscles was observed in two male patients (M III 8 and N III 10). In the former, the calf muscles were firm on palpation and severely paretic (grade 2). This patient will be discussed in detail in the section on the infantile form of FSHD. The latter had been a very muscular man, as could be judged from photographs, and in contrast to the foot extensors the calf muscles were very well developed, but slightly paretic (grade 4) at the time of examination. In both instances hypertrophy of the calf muscles was not present in other patients

in these families. Both cases meet the requirements of the clinical definition of pseudohypertrophy of muscles i.e. hypertrophy with weakness.

4.14. Skeletal abnormalities

In 81 patients (49 males and 32 females) the backs could be examined properly. A scoliosis was observed in 18 males (37%) and eight (25%) females, i.e. in 26 (32%) patients. Only one patient (M III 8) had a severe and progressive kyphoscoliosis that compromised respiratory functions. He had several other notable findings and his case will be discussed in section 4.19 on the infantile form of FSHD. In all other patients the scoliosis was quite mild and most patients were not aware of it. An increased thoracic kyphosis was present in five males (10%) and in four females (12.5%) i.e. in nine (11%) out of 81 patients.

A progressive costal gibbus was present in the patient with severe scoliosis mentioned above (M III 8) and in another male patient with a mild scoliosis (F III 3). Both had an increased thoracic kyphosis. The latter patient had no respiratory complaints.

Pectus excavatum was not observed as frequently as reported by Tyler and Stephens (1950). We observed this in four patients (three males, D II 5, D III 11, J V 18, and one female, L IV 42). Foot deformities have never been observed.

4.15. The cardiac muscle

Cardiac complaints were very rare in the patients under study. Patient C II 6 had angina pextoris and suffered a myocardial infarction at the age of 47 years. In another patient (J III 3) chronic heart failure was diagnosed at the age of 78 years. She suffered a small myocardial infarction when 81 years old. A third patient (D II 5) had coronary and peripheral atherosclerotic disease and chronic heart failure. An aorta

bifurcation prosthesis had been implanted and he was treated with diuretics, digoxine and acenocoumarol. Patient G III 19 had a congenital valvular disease and underwent a commissurotomy at the age of 14: she was free of symptoms at the time of examination. One patient (L IV 44) underwent a cardiologic examination in the course of establishing the diagnosis. The electrocardiogram and phonocardiogram were within normal limits. Two of the deceased patients (B II 1, J III 6) were said to have died from a heart attack.

It appears that cardiac disease in these patients with FSHD was rather a result of a vascular disorder than of a cardiomyopathy.

4.16. Concomitant diseases

Concomitant diseases in our material appeared to be a matter of coincidence. Strumectomy had been performed in one patient. Another deceased patient was said to have suffered from thyroid disease. Other operations, not mentioned in Table 4.18, were gastrectomy (1), appendectomy (2), hysterectomy (1), cholecytectomy (1), scapular fixation (1), and Achilles' tendon elongation (2). The patient with late onset hydrocephalus underwent ventricular drainage. The eye was removed in the patient with the retinoblastoma. A brother of this patient had a retinoblastoma as well; he had no muscular weakness. Retinitis pigmentosa was present in two sisters with FSHD. A third sister with FSHD was ophthalmologically normal.

Intermittent low back pain as a sole symptom was present in four patients. None of them had a severe hyperlordosis. An episode of sciatic pain was reported in two patients.

Psoriasis was found in three patients with FSHD in one family, but it was also present in non-affected members.

Severe depressions were reported in three instances. Two patients related their depressions to the neuromuscular disease. The third patient was an asymptomatic case.

Psychotic episodes have been reported in two patients.

Mental retardation has not been observed in this patient-material.

Table 4.18. Concomitant diseases in 107 patients with FSHD.

Transient ischaemic attack	1
Stroke	1
Hypertension	2
Varicose veins	2
Diabetes	1
Strumectomy	1
Hydrocephalus	1
Retinoblastoma	1
Retinitis pigmentosa	2
Low back pain	4
Sciatica	2
Psoriasis	3
Depression	3
Psychosis	2

4.17. The age of onset

The problem of the age of onset has been discussed in Chapter 2. We divided the patients in symptomatic and asymptomatic ones (abortive cases). The symptomatic patients could give more or less precise information on the onset of muscle weakness. Most of the asymptomatic patients were not aware having the disease. A few of them (E V 1, L V 84, P IV 1) were brought to the attention of a physician by their concerned parents and were made aware of their condition. A similar problem is observed regarding facial weakness. Most patients were not aware of it at the time of examination. Questions about the inability to whistle suggest that facial weakness might be the earliest symptom in the majority of cases. Reporting facial onset depends to a great extent upon an attentive family.

The ages of onset in the symptomatic group of patients are

presented in Figures 4.6. and 4.7.. The mean age of onset of the disease was 17.0 years, if all symptoms were considered (Table 4.19.). The differences between the onset in males (15.8 years) and females (19.0 years) was statistically not significant (P2 = 0.1 Student's t-test). As facial weakness remained unnoticed in the majority of cases, the age of first complaints of any muscle, other than the facial muscles, probably is a more comparable situation in the course of this disease. If symptoms of facial weakness were excluded, the mean age of first symptoms was 17.8 years for all patients. Then the difference between males (16.1 years) and females (20.6 years) was statistically significant (P2 = 0.02 Student's t-test). The last figures do not reflect an early stage of detection.

FIGURE 4.6: AGES AT ONSET OF SYMPTOMS IN 73 PATIENTS (46 MALES, 27 FEMALES)

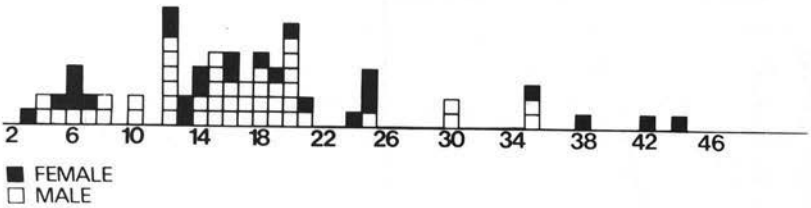

FIGURE 4.7: AGE AT ONSET OF SYMPTOMS (FACIAL SYMPTOMS EXCLUDED) IN 46 MALES, 27 FEMALES

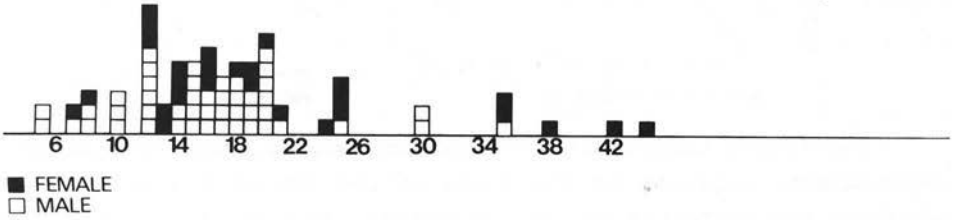

Table 4.19. Mean age at onset in 73 symptomatic patients

	Males	Females	All patients
Facial symptoms included	15.8 (SD6.5)	19.0 (SD11.6)	17.0 (SD8.8)
Facial symptoms excluded	16.1 (SD6.2)	20.6 (SD10.2)	17.8 (SD8.1)

The age of first complaints of all symptomatic patients, given in cumulative percentages, is represented in Figure 4.8.. It shows that at the age of 20 years at least 89% of the males and 63% of the females, that will be symptomatic, can be diagnosed. At the age of 30 years, these percentages are 98 and 81 respectively. For genetic counseling one is particularly interested in the asymptomatic cases. Figure 4.5, which reports only the 49 extensively studied sibships, suggests that in all decades but the first, the expected 50% affected persons can be diagnosed by clinical examination; however, the standard error in the estimated probability of missing a gene carrier in the second decade is rather large (0.229), due to the limited number of observations, so that no firm conclusions can be drawn.

FIGURE 4.8: cumulative percentages of ages of first complaints in 73 symptomatic patients (46 males, 27 females)

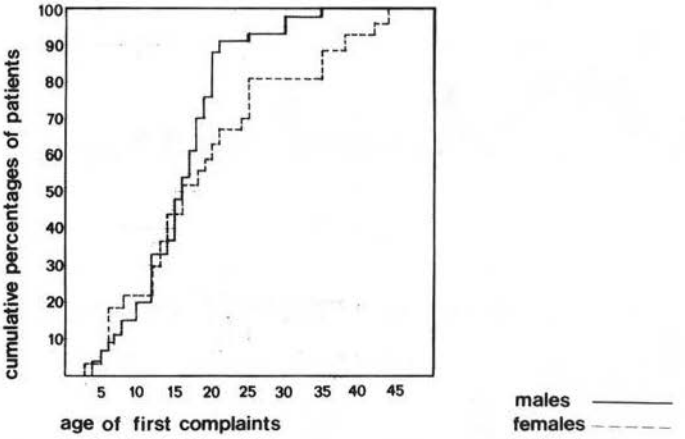

Regression analysis offers another way to also include the asymptomatic patients in the study of the age of onset. Such an analysis was performed on the segregation data of the cohort ages in 84 patients and 80 healthy sibs in 49 sibships (Table 4.6.). If it assumed that a linear relation exists between the age and percentage of affected cases, one finds that at the age of 32 years all cases can be diagnosed by clinical examination (Figure

FIGURE 4.9: PERCENTAGES DETECTABLE GENE CARRIERS AT DIFFERENT AGES, CALCULATED FROM REGRESSION ANALYSIS

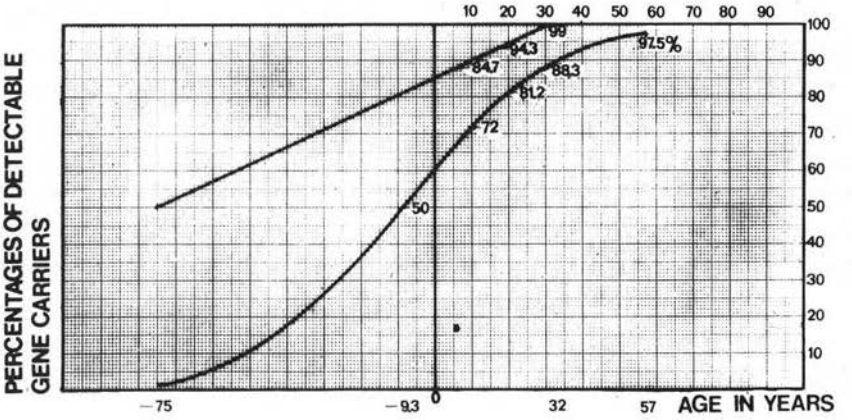

4.9.). At the ages of ten, 20 and 30 years these percentages are 89.7, 94.3 and 99.0 respectively, with a standard error of 9.5%, 7.3% and 5.6% respectively. Fifty percent of the cases can be diagnosed at the age of -75 years. This would be the mean age at onset. The reason for this strange figure lies in the fact that already in the second decade all expected cases could be diagnosed. Clearly, such an analysis is a theoretical one and not much in agreement with reality.

If regression analysis is performed under the assumption that the relation between the age and percentage of affected cases is represented by an S-shaped curve or ogive, the mean age at onset is found to be -9.3 years (Figure 4.9.). This figure appears not to be in contradiction with the statement that a congenital manifestation is within the possibilities of FSHD. According to these calculations, it is possible to diagnose 72.0% of the cases at the age of ten years, 81.2% at the age of 20 and 88.3% at the age of 30 years, with a standard error of 38.3%, 16.9% and 18.1% respectively. The assumption of an ogive is probably more in agreement with the reality since the curves of the ages at onset based on symptoms (Figure 4.8.) appeared to be ogives. Regression analysis has not been performed for males and

females separately because the sex differences in this material were not statistically significant (see section 4.23. on sex-influences).

Variance analysis on the ages of onset revealed no significant correlation between the ages of onset among sibships (P = 0.2 Fisher's F-test) or among kindreds (P = 0.2 Fisher's F-test). These figures led to an intraclass correlation of individuals belonging to the same kindred of 0.06806 and to an intraclass correlation of individuals belonging to the same sibship of 0.24875. From these estimates non-genetic factors appear to play a large role in the age of onset of the disease.

4.18. Abortive cases

Abortive cases are defined as asymptomatic cases. The distinction between symptomatic and asymptomatic patients serves only the practical purpose of studying FSHD. Symptoms of shoulder pain were not accepted as specific for FSHD. Inability to whistle is a fairly reliable sign of facial weakness. It suggests early onset of the disease. But it was never brought out as a complaint, and since it could not help to establish the onset of the disease more precisely, it was disregarded as a criterion on which to base the decision whether a patient was symptomatic or not. It turned out that only a fair degree of girdle or extremity muscle weakness led to complaints. Patients with complaints constitute the symptomatic group and by reciprocity the patients without complaints of muscle weakness form the asymptomatic group.

There were 34 (32%) asymptomatic patients among 107 studied (Table 4.20.). The ages are presented in Figure 4.10.. If we consider the 49 sibships that were extensively studied, the percentage of abortive cases was 30%.

The differences between the absolute numbers of males and females was statistically not significant but, if percentages were considered, the difference between asymptomatic males and females among all patients studied was statistically significant

(P = 0.016 Student's t-test).

Table 4.20. Asymptomatic patients with FSHD.

	Males	Females	Total
All cases considered (107 cases in 19 kindreds)	13 (22%)	21 (44%)	34 (32%)
49 sibships considered (105 cases in 17 kindreds)	12 (21%)	20 (42%)	32 (30%)

FIGURE 4.10 AGES IN YEARS OF 34 ASYMTOMATIC PATIENTS (13 MALES, 21 FEMALES)

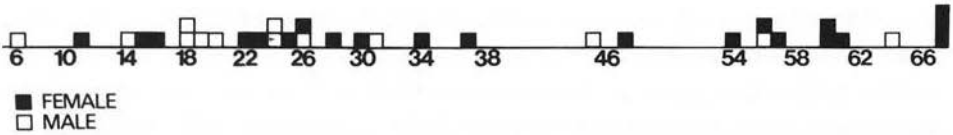

The differences between the percentages of males and females remained more or less the same for many years (Table 4.21.). Since the natural history of the asymptomatic cases is not known, one cannot conclude that such findings indicate that women tend to remain asymptomatic for a longer period of time than men.

Table 4.21. Percentages of asymptomatic patients at different ages.

	All cases	> 20 years	> 30 years
Males	22% (13/59)	16% (8/50)	10% (4/40)
Females	44% (21/48)	40% (18/45)	35% (13/37)
Total	32% (34/107)	27% (26/95)	22% (17/37)

Variance analysis of the cohort data of the 49 extensively studied sibships yielded no significant influence (P = 0.1 Fisher's F-test) of sex and no influence (P = 0.2 Fisher's F-test) of the decades on the frequency of abortive cases. Regression analysis demonstrated no significant (P > 0.05) decrease or increase of the number of abortive cases per decade.

There are two possible explanations for this finding: some patients will remain asymptomatic all their lives or, at each age, some previously asymptomatic patients may become symptomatic, while other gene carriers will develop the first detectable signs and will become asymptomatically affected. The latter mechanism is probably not of great importance, since at most decades the expected 50% of affected sibs could be found (Figure 4.4.).

It is important to note that asymptomatic patients may be found up to the seventh decade. It should be clear that one can never rely on family data if all cases in a family have to be detected.

The degree of muscle involvement in the asymptomatic cases was quite variable (see Table 4.10.). The clinical picture in these cases has been discussed in section 4.6. on the presenting syndromes. The impression existed that a certain, unquantifiable, degree of dissimulation was present in several cases. Denying seemed definitely present in the two cases with pelvic girdle weakness. The man (B IV 4) was unable to run properly and the woman (H IV 3) even refused to accept any other explanation than her mild obesity for her difficulties in climbing stairs.

4.19. Infantile onset and onset in early childhood

Infantile onset, i.e. onset within the first two years of life, was not observed in our patients. Also Möbius' syndrome was never mentioned. Patient O II 2 demonstrated a distinct asymmetry of the orbicularis oris muscle on a photograph taken at the age of three years. Her mother had said that this sign was present at birth but this could not be confirmed. In her case the disease was slowly progressive, with the onset of shoulder girdle weakness at the age of 14 years (see kindred O).

There were several patients in this study who had onset of the disease before the age of seven years (Table 8). Patient Q III 5 was presented at the neurological clinic of the "Wilhelmina Gasthuis" in Amsterdam at the age of four years. Shoulder girdle

weakness was noted several months earlier. In his case the disease ran a rather mild course which is reported in more detail in the description of his kindred. Patient Q III 1 was observed to have facial weakness at the age of five, and shoulder girdle weakness when eight years old.

Another patient that deserves particular attention is M III 8. His parents appeared unrelated. Pregnancy and delivery were unremarkable. His mother thought he was slow in motor development, yet he stood unsupported at 15 months and walked with 17 months. His facial expression was unobtrusive at that time. At the age of four years he was noted to have a waddling gait and to have difficulties in running. At the same time, shoulder girdle weakness became apparent. When he was examined at the age of nine years he had a mild to moderate facial weakness, but a severe paresis of the neck flexors, the shoulder girdle and the upper arm muscles, while the distal arm and intrinsic hand muscles were only minimally to mildly involved. He had pelvic girdle, quadriceps and foot extensor weakness. The quadriceps femoris and triceps surae appeared to be hypertrophic. Myotonia or fasciculations were not observed.

The disease progressed rapidly. He was completely dependent on an electric wheelchair since he was 11 years old. When he was examined at the age of 19 he had a moderate to severe facial weakness. The extraocular, the masseter, the temporalis, the lingual and the pharyngeal muscles were unaffected. His wheelchair was slightly tilted backwards to prevent head and truncal collapse. He had developed a rather severe thoracolumbar kyphoscoliosis and a pectus excavatum. The use of his right hand was very limited. He steered his wheelchair using the right wrist. With his left hand he controlled several electronical devices and a typewriter. His pelvic girdle and upper leg muscles were all graded 1 or 0. He had a severe paresis of his triceps surae muscles (grade 3), which still appeared to be hypertrophic amidst the general atrophy, and a bilateral foot extensor paralysis. Both extensor digitorum brevis muscles could be felt to contract without a visible movement. There was a generalized areflexia.

He had a flexion contracture of his right elbow. All

movements of both his wrists were limited and he had bilateral hip, knee and ankle flexion contractures.

At the age of nine years serum CK activity was 1265 U/L. EMG at that time demonstrated a myopathic pattern. The conduction velocity of the right peroneal nerve was 53 m/sec. Biopsy of the left quadriceps femoris muscle showed myopathic features only.

The father (M II 3) had never been able to whistle. When he was eight years old he developed a progressive shoulder girdle weakness. Foot extensor weakness was noted at the age of 20 years and pelvic girdle weakness at the age of 33 years. At the age of 43 he displayed an average case of FSHD in stage 3. All his brothers were examined and appeared unaffected. His mother could not be examined. She was said to have no muscle weakness. The mother of the proband had no symptoms and her family history was unremarkable.

The case of M III 8 is certainly unusual for FSHD. The hypertrophy of the calf muscles is rather exceptional. The high levels of CK activity might reflect the rate of progression of his disease and the contractures could have been the result of his confinement to bed and wheelchair. The facial weakness had initially been mild, which is different from the cases with the infantile form of FSHD described by Brooke (1977) who all had early and severe facial weakness. Most, but not all, of Brooke's patients had a parent who was minimally affected, which is also different from this case. Still there are no good grounds to reject this case as an unusual expression of a quite variable disease. Also the other patients described in this section testify to the variability of the expression of FSHD. These patients and the other patients mentioned in Table 8 demonstrate clearly that FSHD can manifest before the age of seven years, as was stated by Landouzy and Dejerine (1885) but denied by Tyler and Stephens (1950) and Becker (1953), and that an early manifestation does not necessarily imply the presence of the syndrome with severe facial weakness described by Brooke (1977).

4.20. The clinical course and disability

The course of the disease in our patients will be assessed in two ways. Firstly, we will look at the onset of symptoms. They certainly do not reflect early detectable weakness as is stated in 2.2., but they represent a kind of longitudinal section through our patient-material. Secondly, we will attempt a transverse section and describe the clinical picture at the time of examination.

Table 4.22. gives the onset of symptoms in 73 patients. The mean age of first symptoms, facial symptoms excluded (Table 4.19.), was 16.1 years in males and 20.6 years in females and 17.8 years for all patients. These figures are lower than the mean age of shoulder girdle weakness because a small group of patients first noted foot extensor weakness (group ESP). It is suggested that the shoulder girdle weakness in the ESP group was very slowly progressive, while the onset of foot extensor weakness did not differ significantly from the average for the whole group of patients: if these patients were examined early, they all showed shoulder girdle weakness as well. Symptoms of pelvic girdle weakness also developed quite late in the ESP group, so that this group of patients probably reflects a slow progression of the disease. The five patients in this group (B III 1, E III 1, L IV 12, L IV 42, L IV 44) came from three families. In two patients ankle contractures were present at the first examination. In all these families other patterns of spread of disease have been observed.

The last group, indicated with a question mark, represents all patients who could not give precise ages of the onset of all symptoms. One female (S III 6) had foot extensor weakness and tight heel cords at the age of 14. She noted shoulder girdle weakness when 19 years old but she was unable to tell when symptoms of pelvic girdle weakness were noted first. All other patients in this group had presented with shoulder girdle weakness. Two of them could indicate the onset of foot extensor weakness and five patients remembered the onset of pelvic girdle weakness. Most of these patients though could indicate the Table

4.22. Mean age of first symptoms in 73 patients.

Sequence of muscle involvement	Sex	Number of patients	Mean age at onset of symptoms			Mean age at time of examination
			S	E	P	
S	M	12	16.2			32.3
	F	3	18.7			30.3
	Total	15	16.7			31.9
SE	M	6	16.2	27		32.8
	F	4	23	32		41.5
	Total	10	18.7	29		36.3
SEP	M	15	14.9	22.8	33.4	47.5
	F	5	21	33.4	43.6	57.2
	Total	20	16.5	25.5	36.0	49.9
SP	M	2	17.5		34	47
	F	2	14		27	28.5
	Total	4	15.8		30.5	37.8
SPE	F	2	19	37	23	46
ESP	M	2	45	25	53.5	59
	F	3	41.7	33.7	45.7	52
	Total	5	43	30.2	48.8	54.8
?	M	9	15.8	?	43.7 (131/3)	50.2
	F	8	17.6	25 (75/3)	40.5 (81/2)	61.9
	Total	17	16.6		42.4 (212/5)	55.7
All groups	M	46	17	24.1	36.7	42.6
	F	27	21.7	32.0	38.3	49.7
	Total	73	18.7	27.5	37.3	45.3

S: shoulder girdle muscles; E: foot extensor muscles; P: pelvic girdle muscles; ?: sequence unknown (see text); M: males F: females.

sequence of muscle involvement.

Table 4.22. suggests that, for the group as a whole, foot extensor weakness might be present nine years after the onset of symptoms and that again ten years later symptoms of pelvic girdle weakness might be expected. Such global statements should be handled with extreme caution because the onset of symptoms of foot extensor weakness varied from 0 to 28 years and the onset of pelvic girdle weakness from 0 to 33 years after the onset of shoulder girdle weakness, and some patients even presented with foot extensor weakness. Moreover, other patients will never develop more than shoulder girdle weakness, and some will remain asymptomatic. Patients H IV 5 and I V 7 had been symptomatic for 46 and 39 years respectively. At the time of examination the disease was still limited to the upper extremities.

In order to compare the clinical pictures in our patients we staged their condition as outlined in Table 4.12. The stages were chosen so that all partially examined patients could be classified as well. Stage 1 also comprises patients with the disease limited to their facial muscles. The four patients with pelvic girdle weakness but no foot extensor weakness were classified in stage 3. The different stages reflect an increasing severity of the disease and the criteria for each stage are chosen so as to represent an increasing disability as well. Table 4.23. shows, as could be expected, an increasing severity with age. A similar tendency, although less distinct, is shown in Table 4.24 where the stage of the disease is compared to its duration in 73 symptomatic patients. A comparison of the two tables shows that the bulk of the patients of stage 1 in table 4.23. is formed by the 24 asymptomatic patients, of which eight patients had facial weakness only.

Table 4.23. Stage of the disease related to age at examination in 107 patients.

Stage	0-9	10-19	20-29	30-39	40-49	50-59	60-69	70-79	80-89	Total
1	1	9	11	7	2	1	4			35
2		1	2	2	3	7	3			18
3			5	12	7	10	5	1		40
4					1		1	2		4
5						2	1	1		4
6		1				1	1	1	2	6
	1	11	18	21	13	21	15	5	2	107

Table 4.24. Stage of the disease related to its duration in 73 symptomatic patients

Stage	0-9	10-19	20-29	30-39	40-49	50-59	60-69	Total
1	5	2	2	1	1			11
2	2	3	3	1	1			10
3	3	9	12	8	6			38
4				2		2		4
5			1		2	1		4
6		1	1	1	1		2	6
	10	15	19	13	11	3	2	73

Stage 3 includes many patients with a clinical picture ranging from minimal pelvic girdle weakness, detectable only at examination, to such a degree of weakness that climbing stairs was just possible with extreme effort. The average duration of this stage is probably longer than the previous ones, since this stage involved the largest number of patients, but no adequate data were available to assess this problem.

It is clear though, that the majority of the symptomatic patients (81%) are within the first three stages of the disease, but table 4.23 demonstrates that six out of seven patients (86%) over 70 years of age are within stage 4 or even higher. Since, as will be demonstrated later, the age of death is probably not

affected by the disease, and since the average expected life span in the Dutch population is 72 years in men and 78 years in women, a distinct degree of disability might be anticipated at an older age. If disability is judged by complete inability to walk, only six patients qualified for this criterion. Ten patients (9%) needed a wheelchair when outside their houses. Four of six patients in stage 6 were in a nursing home. Two were nursed at their homes by their husbands with the aid of district-nurses. All patients in stage 1 to 5 were living with their families.

Fifty-two male patients were between the ages of 18 and 65 years. Five patients were still at school or university. Eleven of the 47 patients (23%) were unemployed. Their disabilities were the major reason for unemployment in all patients.

Table 4.25. shows the stage of the disease related to sex. None of the stages revealed a significant difference between the numbers or percentages of males and females. If we adopt Becker's (1953) criterion for severity, i.e. the presence of pelvic girdle involvement, we will find 31 males (53%) and 23 females (48%) severely affected.

We assigned a score 1 to each patient in stage 1 and score 2 to each patient in stage 2 and so on. All 107 patients were scored. All scores added per sex yielded no significant difference between the sexes (P2 = 0.6 Student's t-test). Also, if all patients in stage 4, 5 and 6 are considered together, no significant difference is found between the sexes (P2 = 0.124 Student's t-test).

Table 4.25. Stage of the disease related to sex in 107 patients.

Stage	1	2	3	4	5	6	Total
Males	18 (31%)	10 (17%)	26 (44%)	2 (3%)	1 (2%)	2 (3%)	59 (100%)
Females	17 (35%)	8 (17%)	14 (29%)	2 (4%)	3 (6%)	4 (8%)	48 (100%)
Total	35 (33%)	18 (17%)	40 (37%)	4 (4%)	4 (4%)	6 (6%)	107 (100%)

4.21. Death

The age at death of affected individuals with symptoms was known in 16 males and 12 females. The average age at death in males was 64.2 years. Affected women lived to an average age of 70.5 years. The majority of these patients lived the greatest part of their lives in the first half of this century and died after the second World War. The average year of death in males was 1963 and females 1957. According to the Dutch National Office of Statistics the average age at death in the Dutch population for males in 1963 was 65.5 years and for females in 1957 was 67.3 years. Table 4.6. shows that equal, though limited numbers of affected and healthy sibs, live up to old age and that there are no apparent differences between males and females. These findings suggest in different ways that there is a little or no influence of the disease on the age of death.

Only in a few instances were the precise causes of death known to the families. Two patients (one male, one female) had died of what was said to be a heart attack. Two patients had died of pneumonia. A relation between the disease and respiration was never suggested. Other causes mentioned were drowning (1), complications of alcohol abuse (2), uremia (1), and abdominal malignancy (1).

4.22. Penetrance

The penetrance of FSHD is said to be complete (Tyler and Stephens 1950; Becker 1953). Table 4.5. shows that 85 affected and 80 non-affected sibs are involved in the 49 extensively studied sibships after corrections have been made for the probands and the obligatory gene carriers. These numbers do not differ significantly from the expected 1 : 1 ratio and suggest complete penetrance.

Yet we made two observations that were of interest with regard to the problem of penetrance. Patient H IV 7 (56 years old) was judged a questionable case when first examined. He was restudied after his son H V 20 was found to be clearly affected. His scapulae were somewhat prominent but all shoulder girdle

muscles were found to be of good strength. He could whistle and had no facial weakness. His foot extensor muscles were graded 4+ and his extensor hallucis longus muscles 4. The remaining examination revealed no abnormalities. Because of this minimal foot extensor weakness, he was classified as an abortive case. His wife was examined as well. She revealed no abnormalities.

The other observation was made on P II 1 (68 years old). She claimed she never could whistle well. People had made remarks about her shoulders when she was young and she had never been able to ride a bicycle properly. Yet no definitely abnormal findings were present on physical examination. Her father was said to have suffered from muscular dystrophy and a photograph showed him walking with a steppage gait. Her children were clearly affected. She could not be classified as an asymptomatic case, because she demonstrated no abnormalities on physical examination. She is therefore classified as possibly affected. Still there is little doubt that she is a non-penetrant gene carrier.

Experiences like the ones above demonstrate the potential biases of the examiner. One wonders how these patients would have been classified if they had had no offspring or if their children were too young to show signs. It is known from the examination of children that there is a phase in the development of FSHD in which the diagnosis cannot be made with certainty and, since the decision on who is a gene carrier and who is not hinges on the physical examination, it is suggested that the penetrance of FSHD might not be complete, although it must be almost complete because of the observed 1 : 1 ratio.

The S-shaped curve for the age of onset calculated with regression analysis (Figure 4.9.) suggests that at the age of 57 years 2.5% of the gene carriers have not come to clinical expression yet. Although it is in the nature of such a curve never to cross the 100% line, calculations such as these support the suggestion that there is a chance that a small percentage of the gene carriers may not come to expression in a lifetime.

4.23. Sex-influences

Influences of the sex have been implicated concerning the severity of the disease (Becker, 1953) and the age of onset (Chung and Morton, 1959). We looked at several potentially important differences between the male and female patients.

1. Of the 19 probands, 15 were males and four females, a difference which was statistically significant (P2 = 0.0117 Student's t-test).
2. The mean age of onset, based on symptoms, was 15.8 years in males and 19.0 years in females. This difference was statistically not significant (P2 = 0.1 Student's t-test).
3. Twenty-two percent of the male patients and 44% of the female patients were abortive cases. This difference was statistically significant (P2 = 0.016 Student's t-test).
4. If the severity of the disease was judged by pelvic girdle involvement no important sex-difference was demonstrable. If patients in stage 4, 5 and 6 were considered together, the difference in scores of severity between males and females involved was statistically not significant (P2 = 0.124 Student's t-test).

If the issue of sex-influences on the disease as a whole is considered, we have to correct for the number of tests performed in order to fix our probability of an error of the first kind at 0.05. Since the main factor determining the critical level of the tail probabilities for the total of mutually independent tests is the number of tests involved, we required each of the four tests to have a P value smaller than 0.0125 in order to be significant. This requirement was only met by the test on the number of probands.

The differences between males and females were mostly found in those items that include an important subjective element. It is possible that men by their nature and professional tasks become aware of this disorder earlier than the female sex, and that for similar reasons they seek professional advice more easily.

4.24. Genetic heterogeneity

Several suggestions have been made in the literature that FSHD might be genetically heterogeneous (Chung and Morton, 1959; Kazakov et al. 1974). Regression analysis of the ages of affected sibs (figure 4.9), and anamnestic data of our patients suggested that congenital and infantile manifestation are very well within the possibilities of FSHD.

Kazakov et al. (1974) stated that the spread of muscle involvement to the lower extremities always occurred in a similar manner in one family i.e. either to the foot extensors first and then to the pelvic girdle muscles, or the other way round. We observed shoulder girdle weakness and pelvic girdle weakness without foot extensor weakness in six patients (A IV 4, F IV 1, G III 20, I VI 11, I VI 12, J V 16). Two other patients (J IV 10, L IV 45) were positive that the muscle weakness first had spread to the pelvic girdle and later to the foot extensors. The reverse sequence of spread was observed in other patients in all these families. Therefore we could not substantiate Kazakov's suggestion, based on the clinical course, that FSHD is genetically hetereogeneous.

Chung and Morton (1959) using 18 characters, calculated an interpedigree correlation of 0.747 for their patient-material collected from the literature. Such a figure suggests that multiple alleles or different loci are involved. The authors could not exclude a systematic bias of the various examiners in reporting the onset of symptoms. Also a pelvifemoral onset in 11.6% of their cases suggests heterogeneous material according to our experience. Variance analysis of the ages of onset in our patients (see section 4.17.) yielded an intraclass correlation of individuals belonging to the same sibship of 0.24875. Such a figure argues against heterogeneity.

In summary, no arguments for genetic heterogeneity were found in our patient-material.

4.25. Environmental influences

Influence of non-genetic factors on the expression of the disease could not be proven in our material. The presence of such factors affecting the age of onset has been suggested by finding an intraclass correlation of individuals belonging to the same sibship of 0.24875, but genetic factors leading to such a figure could not be excluded.

The asymmetry of muscle involvement (see section 4.10.) could very well be due to environmental factors, although again, genetic influences of some kind could not be excluded.

Studies of genetic markers showed that patients Q III 1 and Q III 2 were non-identical twins.

4.26. Fitness

To study fitness, we only considered those children of one affected parent, that were older than 25 years (see Table 4.26). Among 107 affected sibs 25 (23.4%) remained single, two were infertile and 80 fertile sibs had 255 children, which was an average of 3.19 children per sib. We also considered 65 non-affected sibs. Fourteen were single (21.5%), two were infertile and the 49 fertile sibs had 150 children, an average of 3.05 children per sib. The relative fitness in the patients with FSHD is therefore 1.04, which is a normal fitness compared to their non-affected sibs. Also the chances to remain single appeared not to be increased in the group of affected sibs, compared to their non-affected sibs.

If the fitness was normal in the past, one would expect to find some very large kindreds. These have not been identified and they were also not suggested by genealogical investigations. This apparent inconsistency is not well explained.

Table 4.26. Fitness in patients with FSHD.

	Single	Infertile	Fertile	No. of children	Average
Affected	25	2	80	255	3.19
Not affected	14	2	49	150	3.06

4.27. Genealogical examination

Extensive genealogical investigations were undertaken in all families described. Information obtained from family members was often of great help. Most of the data could be checked with the aid of the records of the registrar's office. In two of the families (I and L) these data also served to confirm the already suspected relation of various parts of the kindreds. Two families (C and G) were of Indonesian origin through the maternal line. There was little information on the paternal line in family C. The paternal line of family G came from Belgium and could not be traced further. According to both families, the disease was inherited through the maternal, Indonesian line. The ancestors of family F came from Germany. We obtained quite detailed information on the family from the proband but we were unable to confirm all his data. Six and occasionally seven generations of ancestors could be traced in the other 16 families. In general, the lists of ancestors were reconstructed until around 1800 AD. None of the 17 kindreds appeared to have a common ancestor. They also could not be traced to a common region. The chances that the families were related more distantly seemed small. Such findings suggest that mutations are the main factor in the emergence of new kindreds with FSHD. However, it should be realised that the first reported cases in a kindred are not necessarily de novo mutations. One or more generations of abortive cases do occur in FSHD (Pamboukis, 1931), the patients may have had ancestors with late onset of the disease and incomplete penetrance might play a role in some kindreds. The same arguments apply to all sporadic cases: only follow-up studies may elucidate whether they are non-

hereditary cases or mutations.

4.28. Prevalence

Figures about the prevalence of FSHD in the Netherlands cannot be more than a rough estimate. The pedigrees shown still might hide several cases. If approximately one-third of the patients are asymptomatic it is possible that asymptomatic families might be hidden in a population (Pamboukis, 1931). But even symptomatic patients often do not seek referral to a specialized centre. For instance in Family H only the proband (H V 16) was known to us.

Forty-three patients out of 11 kindreds living in the province of North-Holland are included in the present study. We know of another famiy in this area with at least seven affected members. All but one refused examination and are not discussed here. Genealogical examination, going back an average of 180 years, revealed no relation between these families, although they lived in a small area of 2600 square kilometers. At the end of this study, the population of the province of North-Holland was 2.299.175. This would yield a prevalence of approximately 1 patient per 46.000 individuals. Assuming similar prevalences in other parts of this country one would expect at least 300 cases of FSHD in the Netherlands. From the information of other neuromuscular clinics known to us, this figure is probably on the conservative side. No second proband was found in the 12 kindreds in North-Holland. If we assume that the chance for finding no second proband in 12 kindreds is greater than 0.05, than the chance for finding no second proband in one kindred is greater than 0.775, and the chance for finding a second proband in one kindred smaller than 0.225. According to the Poisson distribution the chance of finding a second proband in one kindred with this disease is about $\frac{1}{2}\lambda$, in which λ represents the probability of ascertaining a kindred. Therefore it is estimated that less than 45% of the kindreds in North-Holland have been found. The ascertainment probability (π) is estimated to be smaller than

0.108, which is in agreement with other reports (Morton et al., 1959). These estimates suggest that the true prevalence of FSHD is greater than 1 per 21.000 individuals in our population, a figure which is close to the one reported by Becker (1953).

Because several families had moved in recent times we were unable to estimate directly the number of new cases in a population within a certain period of time (incidence). Although the average Dutchman is expected to live 75.8 years in 1982, so that the average patient with FSHD in the province of North-Holland is expected to live approximately 59 years with this disease, we did not try to estimate the incidence indirectly since this involved too many uncertainties. Similarly, because several families had moved, because of possible illegitimacy, and because of reasons outlined in the previous section, we were unable to estimate reliably the number of mutations by the direct method (Morton et al., 1959). The indirect method appeared not applicable since we observed a normal fitness in our material. Even if we assume a reduced fitness of patients with FSHD, the estimation of the incidence rate is too uncertain to try to calculate a mutation rate.

Chapter 5

Laboratory studies

5.1. Introduction

As many patients as possible were studied with the use of routine laboratory procedures in order to establish the diagnosis in the kindreds as firmly as possible. These procedures included the examination of the serum creatine kinase (CK) activity, needle electromyography (EMG) of several muscles, and biopsies of muscles for histological and histochemical staining. Open biopsies (25) as well as needle biopsies (5) (Edwards 1980) were performed. In several possibly informative kindreds blood and saliva were collected for linkage studies.

5.2. Serum creatine kinase activity

Using automated sample analysers serum creatine kinase (CK) activity was determined in 77 patients with FSHD, and in 39 non-affected sibs (19 males, 20 females), all with one affected parent. The average CK activity in the latter group was 27.9 U/l for both sexes (see Table 5.1.).

Table 5.1. Average serum creatine kinase (CK) activity in 39 non-affected sibs; values in U/l

	Number of patients	Average CK activity	Range	Upper limit of normal
Males	19	21.7	2 - 44	50
Females	20	33.8	0 - 364	35
Total	39	27.9	0 - 364	

Two unaffected females had elevated CK activities. One patient revealed several bruises on physical examination for which she had no good explanation. Her serum CK activity was 364 U/l. Serum CK-MB activity was not detectable in her case. The other patient had a serum CK activity of 53 U/l. If the former patient is disregarded, the average serum CK activity for females would be 16.4 U/l (range 0 - 53) and, for all non-affected sibs 19.1 U/l.

The average serum CK activity was 84.5 U/l in 77 affected sibs (Table 5.2.), and the average value in males (106.4 U/l) was approximately double that in females (53.6 U/l). The asymptomatic patients had a lower level than the symptomatic patients. Twenty-eight patients (15 males, 13 females) had normal CK levels (36%). Normal values were predominantly found in the more advanced stages of the disease.

Table 5.2. Serum creatine kinase (CK) activity in 77 patients with FSHD; values in U/l

	Symptomatic patients	asymptomatic patients	all patients
Males No.	40	5	45
Average CK	107.7	96.8	106.4
Female No.	21	11	32
Average CK	56.4	48.2	53.6
Total No.	61	16	77
Average CK	90.0	63.4	84.5

Table 5.3. shows the relation between serum CK activity and age. Patient M III 8 had a serum CK activity of 1265 U/l at the age of nine years. He was already severely affected at that time. The high CK level is felt to reflect the high rate of progression in his case. The next highest value was 214 U/l. All other values were below 200 U/l. The decline of the serum CK activity with age

is statistically significant (P = 0.0001 Rank Regression Analysis). A similar decline is observed if the relation between the CK activity and the duration of the disease is considered (Table 5.4). This decline with duration is also statistically significant (P = 0.001, Rank Regression Analysis).

The relation between the serum CK activity and the stage of the disease is demonstrated in Table 5.5. If patient M III 8 is disregarded, because of the unusual rapid progression of the disease, the average serum CK-activity in stage 4 would be 38.0 U/l. The low level of CK activity in stages 5 and 6 could reflect both the diminished muscle mass and the immobility of the patients in this stage.

Table 5.3. Relation between serum creatine kinase (CK) activity and age in years in 77 patients with FSHD; values in U/l

Age in years	0 - 9	10 - 19	20 - 29	30 - 39	40 - 49	50 - 59	60 - 69	70 - 79	80 - 89
Males No	1	4	9	11	5	9	4	2	-
Average CK	1265	71.0	112.0	87.6	118.4	52.1	31.0	42.0	-
Females No	-	3	7	7	4	5	5	-	1
Average CK	-	115.0	51.0	59.7	32.5	51.6	38.6	-	14
Total No	1	7	16	18	9	14	9	2	1
Average CK	1265	89.9	85.3	76.8	80.2	51.9	35.2	42.0	14

Table 5.4. Relation between serum creatine kinase (CK) activity and duration of the disease in years in 61 symptomatic patients with FSHD; values in U/l.

Duration	0 - 9	10 - 19	20 - 29	30 - 39	40 - 49	50 - 59
Males No	6	11	7	10	5	1
Average CK	279.7	93.8	112.1	54.0	28.6	55.0
Females No	5	6	6	1	3	-
Average CK	85.0	57.7	43.3	23.0	36.3	-
Total No	11	17	13	11	8	1
Average CK	192.1	81.1	80.4	51.2	31.4	55.0

Table 5.5 Serum creatine kinase (CK) activity related to the stage of the disease in 77 patients with FSHD; values in U/l

	stage 1	stage 2	stage 3	stage 4	stage 5	stage 6
No of patients	20	14	33	4	3	3
Average of CK	64.6	72.2	75.9	344.8	25.3	25.3
Range of CK	10 - 168	23 - 176	11 - 214	23 - 1265	25 - 26	14 - 44

In summary, only a general statement can be made: serum CK activity is only slighty raised in FSHD, in most cases does not exceed four times the upper limit of normal, and declines with age and duration of the disease.

Serum CK-MB isoenzyme activity was measured in 16 patients by ion-exchange column chromotography (Mercer, 1974). It turned out that slightly elevated CK values yielded no detectable CK-MB fractions. In 11 patients (eight males and three females) with CK values above 100 U/l the average CK-MB fraction was 4.4% (range 0 - 6.2%) of the total CK activity. Values were considered normal up to 3%. These observations support previous reports (Klapdor et al.,1977) that the CK-MB fraction rarely exceeds 6% of the total serum CK activity in patients with neuromuscular disorders. The origin of the elevation of the serum CK-MB fraction in patients with FSHD is not quite clear. Silverman et al. (1976) and Zweig et al. (1980) suggested that the MB isoenzyme is of skeletal origin. It certainly cannot be concluded that the cardiac muscle is involved in FSHD.

Serum CK activity was also examined in four sibs younger than ten years. All had normal values. Only one sib (A VII3), five years old, was suspected to be affected on clinical grounds. He had a CK value of 25 U/l. These persons have not been restudied to establish the predictive value of serum CK examination. Walton and Gardner-Medwin (1981) apparently observed no predictive value of the serum CK levels in healthy children of parents with FSHD.

5.3. Genetic Linkage

Genes are considered to be linked if their loci lie in proximity to each other on the same chromosome. The closer the distance between the loci, the smaller the chance that crossing-over between the two homologous chromosomes occurs during gametogenesis. The distance between the loci is expressed in centimorgans. One centimorgan means a recombination frequency of 1%. Large families, in which many generations can be examined are most informative in linkage studies. Also the loci that are studied need to show sufficient heterogeneity in the population. Rarely are all these requirements met. In practice one has to rely on the combined information of several smaller families. Statistical analysis of data, mostly performed with the aid of a computer program, gives the probability of linkage at a given fraction of recombination (θ). These probabilities are expressed in logarithms and are called lod-scores (logarithm of odds). The logarithmic form allows the addition of the results of various studies. If the lod-scores are +3 or higher, linkage is assumed. If the scores are -2 or lower, linkage at the given genetic distance is highly improbable. No definite conclusion can be reached if the scores are between -2 and +3.

We studied possible linkage of the locus of the gene for FSHD with 35 different marker genes. The ten most informative and cooperative families (kindred A - J) participated in this study. We collected blood and saliva from 62 affected and 58 non-affecced members, including 17 non-affected parents.

The blood groups ABO, MNS, P, Rhesus (RH), Kell (K), Lutheran (LU), Duffy (FY) and Kidd (JK) were determined. Phosphoglucomutase (PGM1), 6 phosphogluconate dehydrogenase (PDG), adenylate kinase (AK1), esterase D (ESD), glutamate-pyruvate-transaminase (GPT), superoxide dismutase (SOD1), phosphoglycolate phosphatase (PGP), glyoxalase (GLO), NADPH-diaphorase (DIA2), acid phosphatase (ACP1) adenosine deaminase (ADA), were investigated in lysates of erythrocytes. Pseudo-cholinesterase (CHE2), α 1-antitrypsin (PI), haptoglobin (HP), group-specific component (GC), complement factor (C3), transferrin (TF) and the

Table 5.6 Lod-scores for linkage between the loci for FSHD and several genetic markers at different recombination fractions (θ).

	ABO	MNS	P	RH	K	LU	FY	JK
0.01	- 8.468	- 9.469	0.167	-23.456	-6.773	0.029	-7.513	-1.083
0.10	- 2.316	- 0.762	0.182	- 5.916	-3.124	0.016	-2.665	-0.508
0.20	- 0.887	0.700	0.141	- 1.891	-1.795	0.007	-1.151	-0.232
0.30	- 0.387	0.734	0.077	- 0.494	-0.988	0.004	-0.455	-0.089
0.40	- 0.181	0.276	0.021	- 0.082	-0.426	0.001	-0.147	-0.016

	PGD	PGM1	AK1	ESD	GPT	GLO	ACP1	ADA
0.01	- 2.548	- 4.742	- 1.222	- 8.843	-7.372	-12.622	-7.389	-7.764
0.10	- 0.825	- 1.379	- 0.321	- 2.611	-1.542	- 3.861	-1.745	-2.920
0.20	- 0.247	- 0.544	- 0.124	- 1.085	-0.318	- 1.626	-0.540	-1.920
0.30	- 0.048	- 0.193	- 0.043	- 0.390	0.004	- 0.631	-0.194	-1.469
0.40	0.004	- 0.039	- 0.009	- 0.095	-0.009	- 0.168	-0.097	-0.633

	PI	HP	GC	C3	TF	AM	KM	GM
0.01	-15.577	- 3.600	- 9.613	- 0.848	0.068	- 0.606	-2.285	-2.716
0.10	- 5.715	- 1.542	- 2.328	- 0.507	0.071	- 0.282	-0.956	1.277
0.20	- 2.500	- 0.779	- 0.731	- 0.258	0.074	- 0.048	-0.341	1.428
0.30	- 1.108	- 0.319	- 0.156	- 0.108	0.056	0.016	-0.043	0.889
0.40	- 0.292	- 0.077	0.001	- 0.027	0.023	0.013	0.053	0.252

	HLA-A	B	C	D	AMY1
0.01	-16.964	-22.767	-18.346	-13.725	-2.763
0.10	- 4.120	- 6.721	- 5.179	- 3.892	-0.835
0.20	- 1.253	- 2.575	- 1.764	- 1.347	-0.345
0.30	- 0.185	- 0.747	- 0.348	- 0.301	-0.126
0.40	0.126	- 0.019	0.127	0.057	-0.029

immunoglobulin marker genes AM, KM and GM were studied. Human Leucocyte Antigens (HLA) were typed, and in saliva Amylase (Amy 1) and the proline-rich saliva proteins (PR, PA and DB) were determined. Statistical analysis was carried out with the use of the LIPED program (Ott, 1974).

The scores obtained are represented in Table 5.6. SOD1, DIA2, CHE2, PR, PA, and DB were not informative in these kindreds: their scores were 0 and have been omitted. None of the marker genes studied gave a clear indication for linkage with FSHD. For the polymorphic marker genes ABO, RH, K, FY, ESD, GLO, ADA, GC, PJ and HLA linkage with FSHD at a recombination fraction of 0.10 could be excluded. The highest score obtained was 1.428 for GM at θ 0.20. This score, together with the score of 1.277 at a recombination fraction of 0.10, suggests that there is a possibility that the genes for FSHD and for GM are linked, assuming only one locus for FSHD. More data on independent families will be required to confirm or refute this possibility. Recent studies proved that the locus for the GM system, which codes for the constant region of the heavy chains of IgG immunoglobulins, is situated on the short arm of chromosome 14 (Croce et al., 1979; Shander et al., 1980; Cook et al., 1981). Linkage is known to exist between the GM locus, and PI locus which codes for α 1-antitrypsine. A peak lod-score of 20.75 is found for a GM-PI recombination fraction estimate of 0.26 (Gedde-Dahl et al., 1981). Since the scores for PI and FSHD were all negative in our material, the gene for FSHD - if it were to be found linked with GM - would have to be on the other side of GM.

5.4. Electrophysiological studies

Concentric needle electromyography (EMG) was performed in 31 patients (17 males, 14 females). In all patients at least five relevant muscles were sampled. These muscles were the left deltoid, the right biceps brachii, the right quadriceps femoris, the left gastrocnemius and the right extensor digitorum brevis in 26 patients. In five patients several other muscles were chosen. In 16 patients more than five muscles were sampled.

In all patients the motor nerve conduction velocity was measured in the right peroneal nerve. In nine patients additional motor nerves were studied.

Table 5.7 shows that four patients (two males, two females) had normal electromyograms. One of the males had undergone another EMG two years prior to our examination, which was said to show myopathic patterns at that time. We do not feel a need to introduce new terms, as has been argued in Chapter 2, and will continue to use the terms myopathic patterns and myopathic EMG in those cases where a mixed or interference pattern of brief, small and often polyphasic action potentials is found. We are well aware that certain neurogenic lesions could lead to similar findings (W.K. Engel, 1975).

Table 5.7 Electrophysiological studies in 31 patients with FSHD

			Males	Females	Total
EMG	Patients with normal studies		2	2	4
	Patients with myopathic features only		11	12	23
	Patients with myopathic and neurogenic features		4	0	4
Motor conduction velocity of the right peroneal nerve		≥ 40 m/sec	15	12	27
		< 40 m/sec	2	2	4

EMG of some or all muscles studied revealed a myopathic pattern and no neurogenic findings in 23 patients (Table 5.7). Four male patients, all of different families, had a myopathic pattern on EMG of several proximal upper extremity muscles, while EMG of leg muscles demonstrated neurogenic characteristics. One of these patients (Q III 5) had diabetes mellitus and clinical findings of a polyneuropathy, which had not been present in the past. The polyneuropathy could account for the neurogenic findings on EMG of his lower extremities. His sisters both had a typical picture of FSHD and a normal sensory examination (see kindred Q). The right quadriceps femoris muscle in patient C II 6 showed spontaneous fibrillation potentials and a mixed to interference pattern on maximal voluntary muscle contraction with polyphasic action potentials, and individual action potentials of long duration and amplitudes of 1000 microvolts. The motor nerve conduction velocities were within normal limits. EMG in patient N III 10 revealed spontaneous fibrillation potentials in the right tibialis anterior muscle with a single to mixed pattern on maximal contraction, polyphasic potentials and amplitudes up to 1000 microvolts. The left gastrocnemius muscle and the right extensor digitorum brevis muscle showed a mixed pattern with many polyphasic potentials. The duration of the potentials was not quantified, but the pattern was interpreted as compatible with a neurogenic lesion. The motor nerve conduction velocity of the right peroneal nerve was normal. Also in patient P III 2 (38 years old) a mixed pattern, with many polyphasic potentials and potentials of long duration and increased amplitude was recorded in the right serratus anterior muscle (2000 microvolts) and in the right extensor digitorum brevis muscle (2000 microvolts). The left anterior tibial muscle revealed a single pattern on maximal contraction with polyphasic potentials of long duration and amplitudes of 1000 microvolts, while the right anterior tibial muscle showed a myopathic pattern with potentials of 200-300 microvolts. Fibrillation potentials were observed in the right serratus anterior muscle in this patient.

EMG of the orbicularis oris and orbicularis oculi muscles were performed in two patients (A IV and I VI 11), showing

myopathic features in both.

High frequency (pseudomyotonic) discharges were recorded in patients M III 8 (gastrocnemius), P III 1 (tibialis anterior), and S III 6 (quadriceps femoris).

The motor nerve conduction velocity of the right deep peroneal nerve exceeded 39 m/sec in 27 patients. Patient Q III 5 had a polyneuropathy and a conduction velocity of 30 m/sec. No proper response could be elicited in what was left of the extensor digitorum brevis muscle in patient A IV 3. Two patients (F III 3 and N III 12) showed a conduction velocity of 39 m/sec. The meaning of these values is debatable. At the time of examination the patients were 70 and 50 years old respectively. Two patients (J III K, 78 years old, and J IV 10, 46 years old) demonstrated conduction velocities of 31 m/sec and 23 m/sec respectively. Repeated examination with control of the temperature of the extremities yielded values of 45 m/sec in both patients.

The conduction of other motor nerves tested in nine patients yielded no abnormalities, with the exception of a slight reduction of the conduction velocity in the right (39 m/sec) and in the left (38 m/sec) posterior tibial nerves in patient P III 2. The motor conduction velocities in the peroneal nerves in this case were normal. A previous examination had shown a reduced motor nerve conduction velocity in the right median nerve. Repeated examination revealed normal values.

Our observations strongly suggest that, if properly executed, measurements of motor nerve conduction velocities in FSHD will reveal no abnormalities.

It can be concluded that routine EMG in FSHD shows myopathic features in the majority of cases. Occasionally (in 10% of our cases, i.e. in three out of 30 cases), neurogenic features such as abundant fibrillation potentials, in combination with - often polyphasic - potentials of increased duration and amplitude, may be observed in some of the muscles sampled. The neurogenic features may be present in the upper as well as in the lower extremities.

5.5. Muscle biopsies

Muscle biopsies have been performed in patients of all kindreds, with the exception of kindred Q (see description of the kindred in chapter IV). In patient O III 6 the biopsy was said to have been compatible with a myopathy, but the slides could not be reviewed. Patient H V 16 had undergone a biopsy of the right quadriceps femoris. Only paraffin embedded slides had been made. These were reexamined and showed an increased variation of fibre diameter with hypertrophic fibres (up to 140 micron in diameter) and an advanced endomysial fibrosis and fatty infiltration. Prior to his examination at the neuromuscular clinic of the University of Amsterdam patient F III 3 had undergone biopsies of the left pectoralis major and the left anterior tibial muscles. These biopsies were reported to have been compatible with a myopathy.

We studied 30 muscle biopsies obtained from 28 patients. Histological as well as histochemical preparations have been made in all instances. Haematoxylin and eosin (HE), NADH-tetrazolium reductase (NADH-TR) and myofibillar adenosine triphosphatase (ATP-ase) stains have been made in all cases. Modified Gomori's trichrome, periodic acid Schiff, lactic dehydrogenase and succinic dehydrogenase stains were available in most instances. Occasionally acid phosphatase, oil red O, and other stains have been used.

Six of the 30 biopsies (20%) revealed no abnormalities (Table 5.8). Therefore the diagnosis of FSHD in kindred D rests on non-morphological criteria (see description of this kindred). A similar situation was present in kindred Q, in which no patient had a muscle biopsy. Early in the course of the disease a normal biopsy is particularly found in muscles that are not (yet) involved on clinical examination such as the deltoid of quadriceps femoris muscles. They confirm the experience of physical examination that muscle involvement may be localized in FSHD.

Twenty-four biopsies from 23 patients revealed abnormalities. F IV1 had two biopsies. The biopsies have been examined using the criteria outlined in Table 5.9. Figure 5.1 represents the percentages of the abnormalities found.

Table 5.8. Muscle biopsies without abnormalities in patients with FSHD

S	III	11:	R. deltoid
G	III	20:	L. deltoid
H	V	20:	R. deltoid
I	VI	11:	R. quadriceps femoris
N	III	12:	L. quadriceps femoris
P	III	2:	L. triceps brachii

FIGURE 5.1: FINDINGS IN 24 MUSCLE BIOPSIES OF 23 PATIENTS WITH FSHD

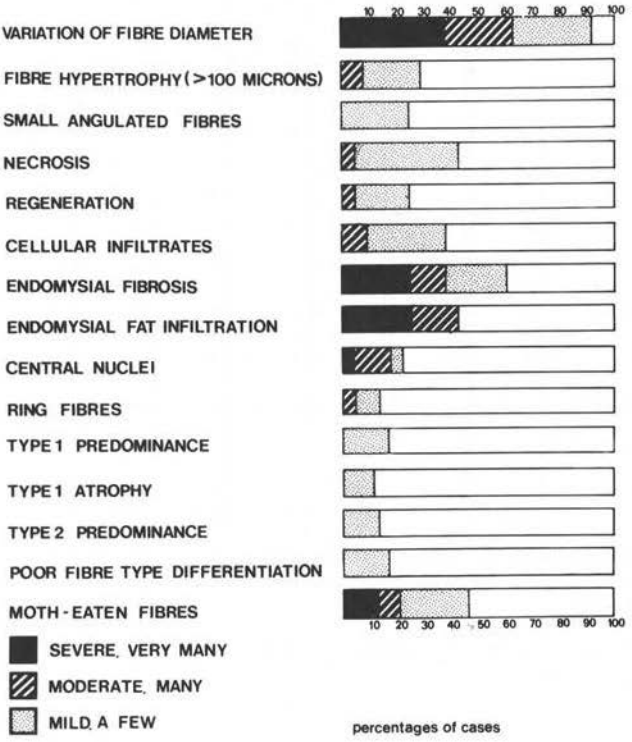

Table 5.9. Resul

Patient	AIV3	AV14	BIII1	BIII6	CII6	CIII1	EIV1	FIII3	FIV1		GIII
Site of biopsy[1]	QL	QL	TAL	TAL	QL	TAR	QR	QL	QL	TR	QR
Variation of fibre diameter[2]	+++	+	+++	+++	+++	++	+	++	–	+	+++
Fibre hypertrophy[2] (>100 u)	–	–	–	+	++	++	+	–	–	–	–
Small angulated fibres[2]	–	+	–	–	–	–	–	–	–	–	–
Necrosis degeneration[2]	–	–	–	+	–	+	+	+	–	–	–
Regeneration[2]	–	–	–	++	–	+	+	–	–	–	+
Cellular infiltrations[2]	–	–	–	–	+	++	++	+	–	–	–
Fibrosis	–	–	++	+++	+++	+	+	+++	–	–	+++
Fat (endomysial)[2]	++	–	++	+++	+++	–	–	+++	–	–	+++
Central nuclei[3]	–	–	++	–	++	+	–	–	–	–	–
Ring fibres[2]	–	–	–	–	–	–	–	+	–	–	–
Type 1 predominance[4]	–	–	–	–	+	+	–	–	–	–	–
Type 1 atrophy[4]	–	+	–	–	–	–	–	–	–	–	–
Type 2 predominance[4]	–	–	–	–	–	–	–	–	–	–	–
Uniform enzyme activity[4]	–	–	+	+	–	–	–	–	–	–	+
Moth-eaten fibres[2]	+++ (G)	+	+	–	++ (G)	+ (G)	–	+++ (G)	+	–	+

1. Q: quadriceps femoris; TA: tibialis anterior;
T: triceps brachii; D: deltiodeus; B: biceps brachii;
R: right; L: left.

2. –: absent; +: mild, a few; ++: moderate, many;
+++: severe, very many.

f 24 muscle biopsies in 23 patients with FSHD.

VI11	JIV10	KIV2	LIV42	LIV44	LIV44	LV84	MIII8	NIII10	PIII1	RII6	SIII2	SIII6
L	QL	QR	QR	BL	QR	QR	QL	BL	BR	QL	TAR	DR
+	+	–	++	++	+	+	+++	+++	+++	+	+++	++
	–	–	–	+	–	–	–	–	–	–	+	–
	–	+	+	–	–	+(G)	–	–	+	+(G)	–	–
	–	–	+	+	–	–	++	–	+	–	–	+
	–	–	–	+	–	–	+	–	–	–	–	–
	+	–	–	+	–	–	+	+	–	+	–	–
	–	–	–	+	+	–	++	+++	–	–	++	+++
	–	–	–	–	–	–	++	+++	–	–	++	+++
	–	–	–	–	–	–	++	+++	–	–	–	–
	–	–	–	–	–	–	–	++	–	–	+	–
	–	–	+	–	+	–	–	–	–	–	–	–
	–	–	–	+	–	–	–	–	–	–	–	–
	–	+	–	–	–	–	–	–	+	+	–	–
	–	–	–	–	–	–	–	–	–	–	+	–
	–	–	–	–	–	–	+	+++ (G)	–	–	++	–

3. –: absent; 3–10%; ++: 10–20%; +++: 20% or more

4. –: absent; +: present.

G indicates: observed in groups.

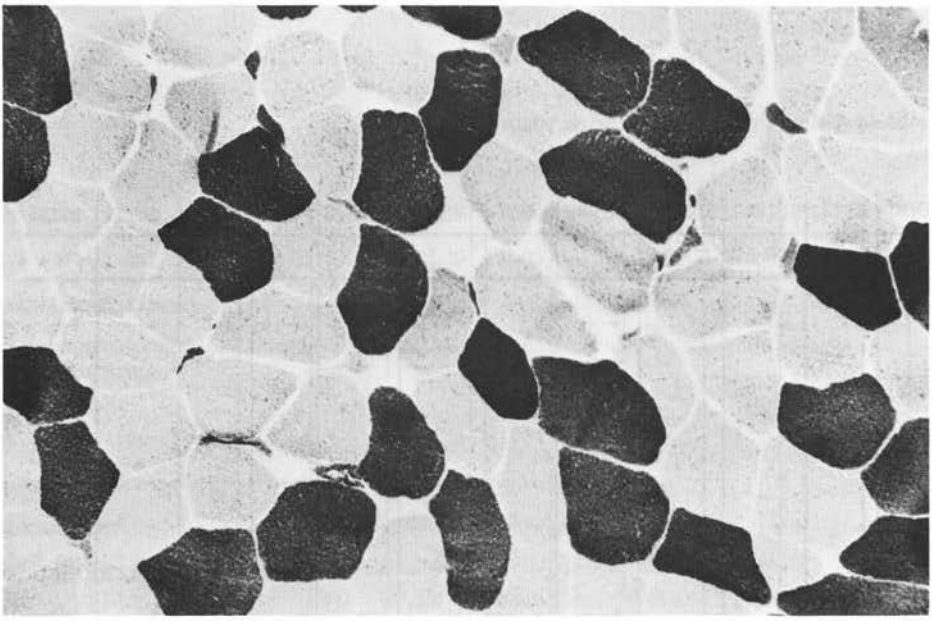

Figure 5.2. Patient LV84: small angulated fibres. Routine ATP-ase x 400.

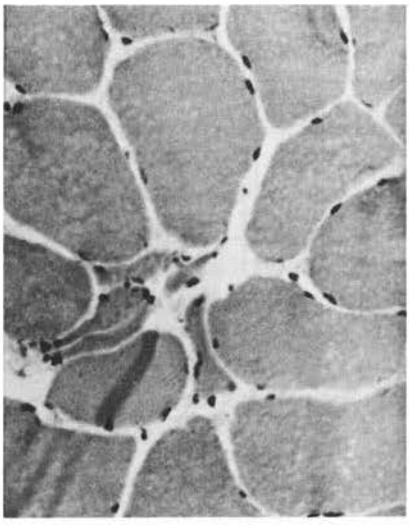

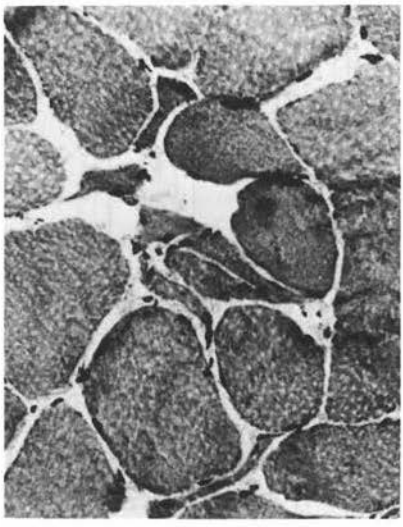

Figures 5.3. and 5.4. Patient LV84: small groups of atrophic fibres. HE X 400.

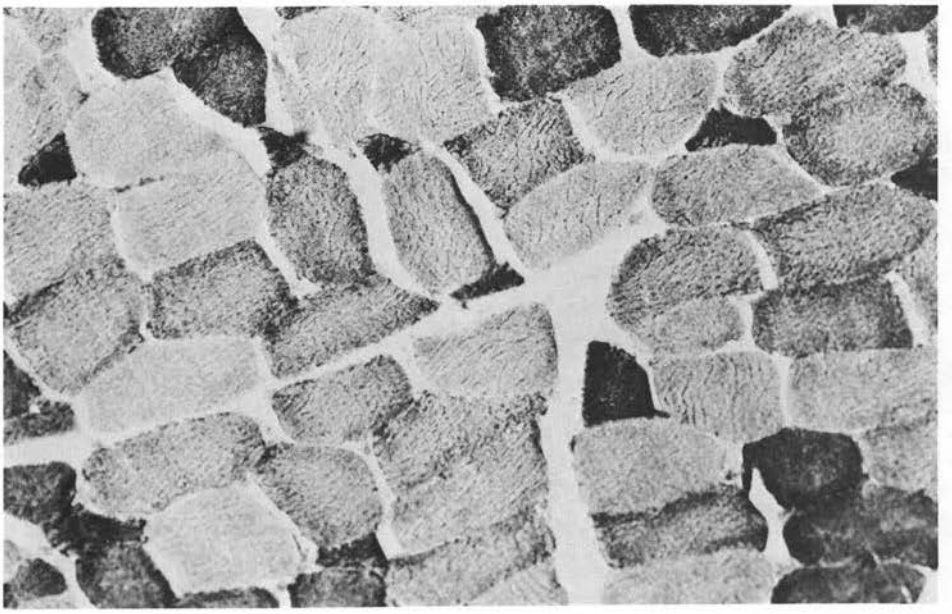

Figure 5.5. Patient A V14: atrophic type 1 fibres. NADH-TR x 400.

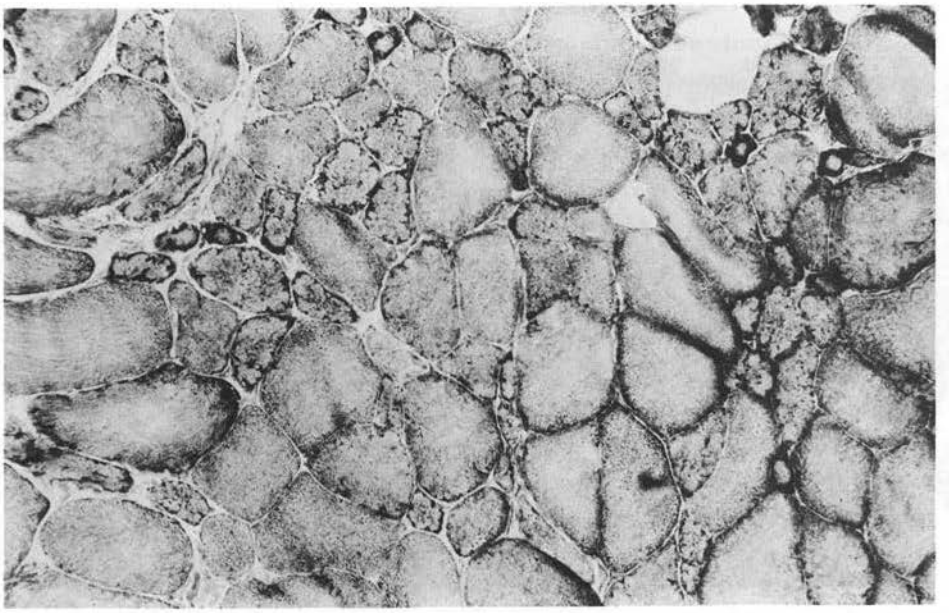

Figure 5.6. Patient F III 3: groups of moth-eaten fibres. NADH-TR X 400.

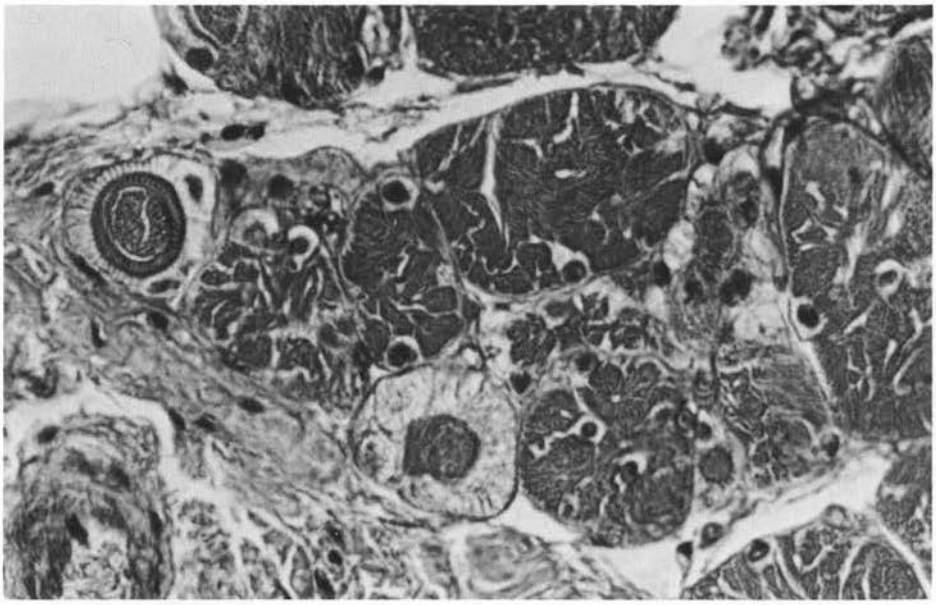

Figure 5.7. Patient N III 10: sarcoplasmic masses and ring fibres. HE X 1000.

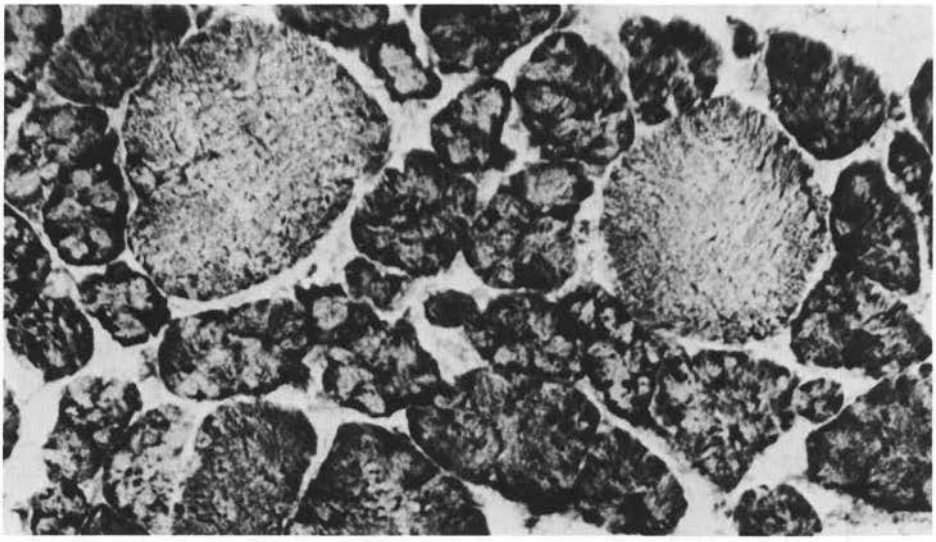

Figure 5.8. Patient N III 10: moth-eaten fibres in clusters. NADH-TR X 1000.

An increased variation of fibre diameter was present in most cases (92%). Fibres were measured using a calibrated ocular. Hypertrophic fibres, i.e. fibres with a diameter exceeding 100 microns were found in one-third (33%) of the cases. Small angulated fibres were present in six biopsies (25%) (Figure 5.2). In four of these biopsies the small fibres occurred in small clusters of three or four cells (Figures 5.3 and 5.4). Larger groups of atrophic cells were not observed in these biopsies. Signs of degeneration such as necrosis and phagocytosis were present in eight biopsies (33%). The biopsy with the most necrotic fibres was the one of patient M III 8, who indeed exhibited the most rapid progression of the disease of all patients. Signs of regeneration, such as basophilic fibres with vesicular nuclei and prominent nucleoli, were remarkably inconspicuous. Small cellular infiltrations, occasionally rather frequently present, were never as extensive as reported in the literature (Munsat et al., 1972). No relation was apparent with complaints of muscle pains, but the pain was invariably located in the shoulder region, where a biopsy was rarely taken. Endomysial fibrosis (58%) and fatty infiltration (42%) were rather common in this material. Most of these patients were seen in a rather advanced stage of the disease. Ring fibres were observed in three patients (12.5%). Sarcoplasmic masses were present in the biopsy of patient N III 10. Fibre splitting was observed in three biopsies (J IV 10, K IV 2 and S III 2).

The histochemical stains were used for fibre typing, for the study of the organisation of the fibres in the biopsy, and for the identification of morphological peculiarities such as moth-eaten fibres. Predominance of fibre type 1 was observed in four biopsies (17%). Selective atrophy of type 1 fibres was observed in two biopsies (8%). Figure 5.5. shows the NADH-TR stain of the biopsy in patient A V 14. The atrophic fibres are type 1 fibres, as was affirmed by the ATP-ase stain. Predominance of fibre type 2 was present in three (12.5%) biopsies.

Poor fibre type differentiation (Dubowitz and Brooke, 1973) was observed in four biopsies. This phenomenon is often reported in Duchenne muscular dystrophy but it is ill-explained. Van

Wijngaarden and Bethlem (1973) observed uniform enzyme activity in 27 out of 32 biopsies of patients with benign infantile spinal muscular atrophy. They suggested that uniform enzyme activity might be the result of the neurogenic lesion in these patients. The uniform enzyme activity in these two conditions might not be the result of the same mechanism. In two of our biopsies (G III 17 and S III 2) vague suggestions of fibre type differentiation were present in other than ATP-ase and NADH-TR stains.

Moth-eaten fibres have been observed in 11 biopsies (46%). This frequency is remarkable and in agreement with previous observations (Bethlem at al. 1973). They varied from small fibres, scattered through the biopsy, to large fibres in clusters. In five biopsies they occurred in groups (Figure 5.6.). The reasons for this arrangement are obscure. A vasogenic lesion might be an explanation although morphological abnormalities of the small vessel walls have not been observed. However perivascular cellular infiltrations were present in four of those five biopsies. Another explanation for the grouped arrangement can be found in postulating a neurogenic lesion. The aberrant myofibrils and the sarcoplasmic collections in the moth-eaten fibres have been elegantly demonstrated by Bethlem et al. (1973): they resemble at an ultrastructural level the ring fibres with the sarcoplasmic masses known from histological examinations. Patient N III 10 demonstrated both features (Figures 5.7. and 5.8.).

In summary, judged by pathological criteria, it can be said that both the nature and the degree of muscle involvement may be quite variable. Most abnormalities suggested a myopathic condition. The low degree of necrosis and the even lower degree of regeneration were remarkable and compatible with the slowly progressive course of the disease. The amount of cellular infiltrations was impressive at times, but infiltrations were not present in all biopsies.

Definite neurogenic findings such as type grouping, distinct group atrophy, and target fibres, have never been observed, but several features such as small groups of atrophic fibres, small angulated fibres, and clusters of moth-eaten fibres suggest that

neurogenic factors might play a role in FSHD. One or more of these features were present in 11 (46%) out of 24 abnormal biopsies.

5.6. Discussion

Physical examination and family studies (Chapter 4) suggested that the patients in kindreds A-S suffered from the same disorder. Linkage studies (5.3.) did not give evidence for linkage between the locus for the gene of FSHD, and the loci of any of the 35 genetic markers used.

The serum creatine kinase (CK) activity revealed a rather uniform pattern in these patients (5.2). Elevation of the CK activity rarely exceeded four times the upper limit of normal. Normal values were obtained in approximately one third of our patients, and particularly in the more advanced stages of the disease. Determination of the CK activity might be helpful in the occasional case when physical examination leaves doubts whether someone is affected or not. A marked CK elevation does not rule out FSHD but suggests also to consider disorders such as polymyositis. In most instances determination of the serum CK activity is not very helpful in the differential diagnosis of FSHD, because all disorders to be considered are able to give CK elevations similar as in FSHD.

In several instances needle EMG (5.4.) and histological and histochemical examination of muscle biopsies (5.5.) revealed features considered to be of neurogenic origin. We will discuss the results in each kindred in order to demonstrate that the neurogenic abnormalities occur in some members of the families and not in others of the same families. It is inferred that neurogenic features in EMG and muscle biopsy are part and parcel of this disease.

Kindred A demonstrates the importance of histochemical staining in muscle biopsies. Groups of small fibres in the HE stain proved to be moth-eaten fibres in A IV 3. In patient A V 14 the small fibres represented selective type 1 atrophy. In both

patients EMG showed myopathic features. Myotonia was not observed.

Patients B III 1, and B III 6 both showed myopathic features on EMG. Poor fibre type differentiation was present in the biopsies of the anterior tibial muscles in both these patients. This might be related to the site of the biopsy, as patient S III 2 presented a similar picture. In the other cases, where the anterior tibial muscle was biopsied (C III 1), type 1 predominance was found, a feature reported to occur frequently in biopsies of these muscles (Mercelis et al., 1981).

Both patients in family C showed moth-eaten fibres in groups and no small angulated fibres. In patient C III 1 EMG was performed in another hospital and reported to be without abnormalities: he was not reexamined. Patient C II 6 had neurogenic features on EMG of his quadriceps femoris muscle.

In patient D III 11 EMG showed myopathic features. Biopsy of his deltoid muscle revealed no abnormalities.

Myopathic features were present both on EMG and in the biopsy of patient E IV 1.

Patient F III 3 demonstrated many moth-eaten fibres in groups (Figure 5.6.), myopathic features on EMG and a reduced conduction velocity of his right peroneal nerve (39 m/sec). EMG in his daughter (F IV 1) revealed no abnormalities.

The two brothers in family G were studied in more detail. Both had myopathic features on EMG. G III 17 showed myopathic features on histological examination of the biopsy of the right quadriceps femoris muscle: histochemistry revealed poor fibre type differentiation. The biopsy in his brother G III 20 was normal.

EMG and histological examination in patient H V 16 suggested a myopathy. The EMG and muscle biopsy in his cousin (H V 20) revealed no abnormalities. Patient I VI II had myopathic features on EMG and muscle biopsy similar to patient J IV 10.

In patient K IV 2 both angulated fibres and fibre splitting were present in the biopsy of his right quadriceps muscle. EMG revealed no abnormalities.

In family L, EMG studies suggested a myopathic condition in

L IV 44, L IV 45 and L V 84, while the muscle biopsy revealed myopathic abnormalities in patients L IV 42, L IV 44 and L IV 45. Patient L V 84 demonstrated numerous small angulated fibres, occasionally occurring in a small group (figures 5.2., 5.3., and 5.4.).

In patient M III 8, both EMG and muscle biopsy suggested a myopathic condition.

The motor conduction velocty of the right peroneal nerve in patient N III 12 was 39 m/sec. EMG revealed myopathic features. A biopsy of the left quadriceps femoris muscle was normal. Her brother, patient N III 10, was observed by others to show fasciculations in several shoulder girdle muscles. When he was examined by us, neither fasciculations nor myotonia were observed. His calf muscles were well developed and slightly paretic. EMG of upper extremity muscles showed myopathic findings, but EMG of the anterior tibial muscle showed spontaneous fibrillation potentials and a single to mixed pattern on voluntary contraction with polyphasic action potentials and single potentials up to 1000 microvolts. A biopsy of the left biceps muscle in this patient revealed a marked variation in fibre diameter, ring fibres, sarcoplasmic masses and numerous central nuclei. Large numbers of moth-eaten fibres could be demonstrated (Figures 5.7. and 5.8.). This biopsy could have been compatible with myotonic dystrophy but neither myotonia nor other physical characteristics suggesting this disorder were present.

The muscle biopsy in patient O III 6 could not be re-examined: it was said to have shown myopathic changes.

On EMG P III 2 demonstrated neurogenic features in some muscles in his arms and legs. Biopsy of the left triceps muscle revealed no abnormalities. EMG in P III 1 suggested a myopathy. Biopsy of the right biceps revealed small angulated fibres and type 2 predominance. Similar findings were present in patient R II 6.

The neurogenic features on EMG of the leg muscles in patient Q III 5 could be explained by the diabetic polyneuropathy from which he suffered. EMG of the arm muscles showed a myopathic pattern. A muscle biopsy was refused.

Two patients of family S (S III 2 and S III 6) had a myopathic pattern on EMG. Muscle biopsies revealed myopathic abnormalities on histological examination in both patients. Histochemical studies revealed poor fibre type differentiation in patient S III 2 in whom the anterior tibial muscle was biopsied. In patient S III 6 some fascicles suggested type 2 predominance, while a normal pattern was present in other fascicles. Such experiences emphasize that chance factors are involved in taking a biopsy.

Several features of the muscle biopsies have been put forward in section 5 to be due possibly to neurogenic lesions. Such lesions could account for the neurogenic features on EMG in patients with FSHD. The most convincing features, suggesting a neurogenic factor in FSHD, are small groups of atrophic fibres, small angulated fibres and individual amplitudes larger than 1000 microvolts. These were present in nine out of 28 patients (32%) who had both EMG and muscle biopsy. Only one patient (H V 20) had no abnormalities in both. Neurogenic lesions occur in some members of the families and not in others, and are considered part of the disease.

Chapter 6

Cases resembling facioscapulohumeral disease

It has been argued that establishing an autosomal dominant pattern of inheritance is essential for the diagnosis of FSHD. So far, no solid proof has been put forward for an autosomal recessive disorder closely resembling FSHD. Sporadic cases have been observed but it is impossible to prove that they are not new mutants of FSHD. The opposite is equally difficult to ascertain at the time of first examination. Genetic advice should be given with caution in these cases. We observed several patients who were proof to their parents of the autosomal dominant nature of the disorder. In several families (kindreds G, K, R and S) the autosomal dominant pattern of inheritance had not been established before our study, nor was it suggested by the family history.

While studying the families of the probands diagnosed on the basis of clinical criteria to suffer from FSHD, in three families we were unable to establish an autosomal dominant pattern. In two families adequate family data were lacking. Extensive reporting of these cases is not useful; they will be mentioned briefly below.

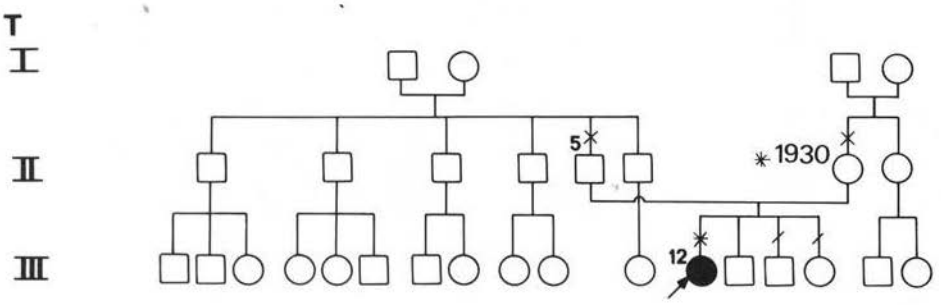

In one family (kindred T) both parents were examined in detail: they demonstrated no abnormalities. Paternity investigation was not undertaken. A brother (T III 14) and a sister (T III 15) of the proband were examined briefly; neither of these showed signs of muscle weakness or atrophy. Genealogical examination, going back 180 years, did not demonstrate or even suggest a relationship with the FSHD families reported in this study. The mother is sure that facial weakness was present in her daughter since the age of nine months. At the age of 12, the patient (T III 12) noticed difficulties writing on a blackboard. Her shoulder girdle weakness steadily progressed. When examined at the age of 24, she had a marked facial weakness and she was just able to swing her arms up on a shelf above shoulder level. She also had a mild paresis of the abdominal muscles, foot extensor weakness and asymptomatic ankle contractures. Fasciculations and myotonia were not observed. Sensory examination was normal at the age of 15. EMG and biopsy of the quadriceps femoris muscle had revealed no abnormalities. Serum CK activity at that time was raised twice the upper limit of normal. A definite diagnosis could not be made in this patient. Facial onset and the clinical picture, as it subsequently developed, is quite compatible with FSHD.

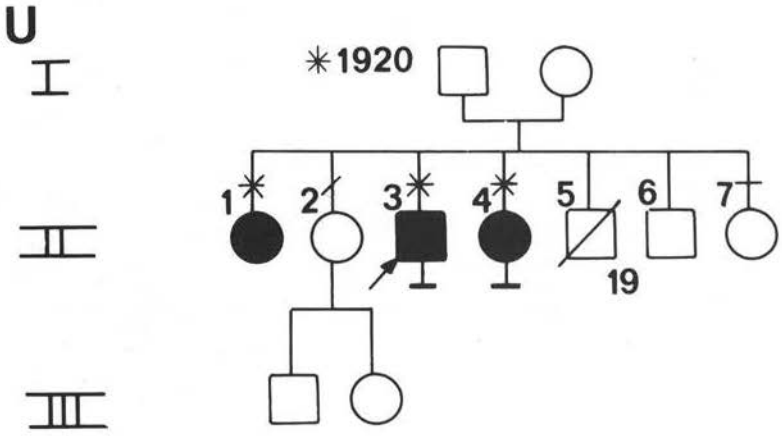

In another family (kindred U), three sibs were affected. The parents and U II 6 had no complaints; they were not examined as they lived abroad. U II 1 had facial weakness before the age of five. Running became difficult at elementary school. Climbing stairs was possible until 21 years. She fractured her right tibia at the age of 32: after 11 weeks of immobilisation she was unable to walk. At the time of examination (34 years old) she had a marked facial paresis with good strength of the masseter muscles and no atrophy or fasciculations of the tongue. There was an asymmetric paresis of the shoulder and arm muscles, proximally more marked than distally. The legs were severely paretic with the exception of the gastrocnemius muscles. Sensory examination was normal. All myotatic reflexes were absent, with the exception of the ankle jerks; no pathological reflexes could be elicited.

Her brother (U II 3) developed a similar clinical picture, starting with facial weakness at the age of five. Progressive shoulder girdle weakness and footextensor weakness was noted since the age of eight. U II 4 was reported to have gait disturbances at the age of three. She remembered having needed speech therapy at the age of four, together with her brother. She could walk until the age of 15 and finally developed a picture very similar to that of her sister. In both U II 1 and U II 3, EMG and muscle biopsy revealed myopathic changes. Two other sibs (U II 2 and U II 7) were examined and demonstrated no abnormalities. A brother (U II 5), who was a marine, had died in an accident. Genealogical examination did not suggest any relationship with the FSHD families reported in this study.

The clinical picture in these three patients is similar to FSHD. The early onset of facial weakness and the rapidly progressive course would fit Brooke's description of the infantile form of FSHD. It is frequently observed in those instances that one of the parents has slight facial weakness; and, as facial weakness may go unnoticed to the patient, FSHD is still a possible diagnosis in this family.

In another sporadic case, family examination revealed the patient to be an illegitimate child. Nothing was known about the natural father, who could not be examined. Physical examination

of the mother revealed no abnormalities.

All the cases discussed above demonstrate once more, that examination of the families is crucial in all instances where autosomal dominant inheritance is not apparent. In the true sporadic case in this material (T III 12) the myopathic nature of the disorder has not been documented sufficiently.

Chapter 7

General discussion

This study describes facioscapulohumeral disease (FSHD) based on a survey of the relevant literature and on personal experience with 107 patients. After some historical remarks (Chapter 1), the picture of FSHD, as it emerges from the literature, is described in Chapter 2. The differential diagnosis of FSHD is dealt with in Chapter 3. The length of this chapter is not so much caused by a long list of diseases as by the attempt to clear some of the confusion that has arisen after the introduction of the term facioscapulohumeral syndrome (FSHS). Originally, that term served only to summarize the clinical condition of patients in whom facial and shoulder girdle weakness and atrophy were the main features of the disorder (Van Wijngaarden and Bethlem, 1973). Described as such, and disregarding other clinical features, the clinical course, and the pattern of inheritance, it turned out to be a rather non-specific syndrome. Later, this term was used to discuss the differential diagnosis of FSHD (Carroll, 1979). So it became customary to name several diseases in the differential diagnosis of FSHD that are not considered in daily practice, in which all clinical data, including the personal and the family history, are taken into account. Actually, the differential diagnosis of FSHD is rather limited and even more restricted if autosomal dominant inheritance has been established. In that case, only mitochondrial myopathies (Hudgson et al., 1972; Bradley at el., 1978) and spinal muscular atrophies (SMA) should be considered. In the latter, the muscle involvement spreads in an ascending order in contrast to FSHD. Autosomal dominant SMA with a descending course and otherwise resembling FSHD, has not been documented satisfactorily. The differential diagnosis becomes more extensive if the family cannot be examined and if heredity is not obvious. Autosomal recessive conditions resembling FSHD in

all aspects, have not been demonstrated convincingly. Sporadic cases have been described: how many of these patients are de novo mutations of FSHD is not known.

The discussion on the differential diagnosis serves also to support all other arguments that the patients described in Chapter 4 suffer from the same disorder. The results of the physical examination and of the family studies in these patients will be discussed in more detail below.

Chapter 5 describes the laboratory data in our patients. Serum creatine kinase (CK) activity was within normal limits in 34% of the cases. The elevation of the CK activity rarely exceeded four times the upper limit of normal. Similar observations have been reported in the literature. Both with age and duration of the disease a statistically significant decline of CK levels was observed.

Possible linkage between the locus for FSHD and the loci for 35 genetic markers was studied, using blood and saliva of 62 patients and 59 non-affected family members, including 17 non-affected parents from ten kindreds (kindreds A - I). Statistical analysis, using the LIPED program (Ott, 1974), revealed no scores suggestive of linkage. The highest positive lod-score obtained was 1.428 for GM at θ 0.20.

Neurogenic features on electromyography (EMG) are reported in patients with FSHD (McComas, 1977). We observed a large amplitude (1000 microvolts or more) of single motor unit action potentials in some muscles of three patients (10%), while other muscles in these patients revealed a myopathic pattern. Only myopathic patterns were recorded in 74% of the patients. One patient (3%) had neurogenic features on EMG, but also a diabetic polyneuropathy in addition to FSHD. In four patients (13%) EMG was normal.

Muscle biopsies yielded similar results. Small angulated fibres, considered to suggest denervation, were present in six (20%) biopsies. Six biopsies (20%) revealed no abnormalities. Eighteen biopsies (60%) showed myopathic features and other, less well explained changes such as groups of moth-eaten fibres.

As there is ample documentation that myopathic features both

on EMG (Emery, 1981) and on muscle biopsy (Drachman et al., 1967) may be found in cases with neurogenic muscular atrophy, and as the reverse is rarely mentioned (Dastur and Razzak, 1973), there is a distinct tendency in the literature to let the neurogenic features weigh heavier in the discussion on the primary lesion in neuromuscular conditions. This might explain that small angulated fibres in a muscle biopsy have led to the description of autosomal dominant FSH spinal muscular atrophy (Fenichel et al., 1967). We consider the neurogenic features part and parcel of FSHD as they occur only in some members of families with FSHD and not in other members.

The results of physical examination in 107 patients with FSHD and the analysis of the kindreds, as described in chapter 4, testify to the homogeneity of the disorder in these patients. Comparison with results reported in the literature and mentioned in Chapter 2 will be made only when relevant.

Presenting symptoms of shoulder girdle weakness were noted in 82% of our cases, those of facial weakness in 10% and presenting symtoms of foot extensor weakness were reported in 8% of the cases. In no instance the disease presented with symptoms of pelvic girdle weakness. This is in contrast to Chung and Morton's data (1959), collected largely from the literature, in which pelvic girdle onset was reported in 12% of the cases. They suggested that their patient - material was genetically heterogeneous, as they calculated an intraclass correlation of 0.747. It is possible that cases with autosomal dominant neurogenic disorders were included, because most of their patients were studied before the age of modern laboratory tests. Chung and Morton (1959) also reported facial onset in 20% of their cases. It is not very clear which criteria they applied. We considered inability to whistle not specific for facial weakness. At the beginning of our study it was not certain if the symptom of inability to whistle was suffiently sensitive. Seven of our symptomatic patients (10%) remembered events, other than inability to whisle, indicating early facial weakness. Fifty-four of all our 107 patients (51%) never had been able to whistle: all these patients had facial weakness when examined. As the patients

who lost the ability to whistle (12%) could not indicate when this had happened, no specific age at onset of facial weakness could be given. Fourteen patients (13%) had weakness of the orbicularis oris, but could whistle. Becker (1953) and Chung and Morton (1959) did not report foot extensor onset in their cases. Tyler and Stephens (1950) were the first authors who drew attention to early foot extensor weakness in FSHD: this was confirmed by others (Chyatte et al., 1966). Even if FSHD presented itself with complaints of foot extensor weakness, a fair degree of shoulder girdle weakness was observed on physical examination.

Physical examination of 107 patients resulted in a rather circumscribed and uniform picture. We observed facial weakness in 94% of the cases at the time of examination. Becker (1953) reported 81% and Chung and Morton (1959) 83%. In eight of our 107 patients (7%) facial weakness was the sole finding. All other patients (93%) had shoulder girdle weakness. Foot extensor weakness was present in 72 cases (67%) and pelvic girdle weakness in 54 cases (50%). Similar figures are reported by Becker (1953) and Chung and Morton (1959). It should be noted, however, that many of Becker's cases are included in Chung and Morton's material.

Judged by the degree of muscle weakness and based on anamnestic data we found the descending spread of muscle involvement characteristic of FSHD.

We divided the course of the disease in six stages, each stage characterized by the emergence of easily recognizable symptoms. These symptoms in themselves reflect degrees of disability. This simple system proved to be a valuable tool in evaluating the course of a patient's disease. Facial weakness appeared within the first two stages in our material, but it could not be used to record progression, as many patients were unaware of it.

After involvement of the scapular fixators (the rhomboidei, the lower trapezius and the anterior serratus) and of the pectoralis major and latissimus dorsi (stage 1), the foot and toe extensors (the anterior tibial, the peroneus longus and brevis,

the extensor hallucis and extensor digitorum muscles), the abdominal muscles, the other periscapular muscles and the upper arm muscles become involved (stage 2). The onset of pelvic girdle weakness characterizes the beginning of stage 3. In this stage, the onset of weakness of the lower arm muscles might be observed. The onset of stage 4 is marked by the loss of the ability to climb stairs. In stage 4 there is a further progression of the disease, leading to general involvement of most muscles, with notable exception of the extraocular, the pharyngeal, the lingual and masticatory muscles. A patient dependent on a wheelchair, when outdoors, is considered to be in stage 5; when walking inside the house, such patients lean heavily on chairs and tables. In stage 6 a patient is totally dependent on a wheelchair and on nursing care.

We found a distinct asymmetry of muscle involvement in which the right shoulder or arm was significantly more frequently more severely involved than the left. This was not related to the body side; a similar asymmetry was observed in the legs but the more severe involvement occurred in equal frequencies on each side. A statistically significant positive correlation of upper limb involvement was observed with handedness.

As a rule, the tendon reflexes were lower and finally absent with increasing muscle involvement, but there was no constant relation with muscle weakness or atrophy and no constant order of disappearance of reflexes.

Muscle contractures are said to be rare in FSHD (Walton and Gardner-Medwin, 1981). Our experience confirms this general statement, but an exception has to be made for ankle contractures, which occurred in ten of our patients (10%). In three patients they brought about the first complaints.

Pseudohypertrophy of calf muscles was observed in two unrelated male patients (2%), and was absent in other members of their families. A thoracolumbar scoliosis was present in 32% of the cases, and an increased thoracic kyphosis in 11%. The scoliosis was severe in one patient only; in all other patients the scoliosis was very mild. Cardiac symptoms were rare and cardiac disease appeared to be un related to the neuromuscular

disorder.

A high percentage of the cases (32%) was abortive, defined as affected but asymptomatic. Tyler and Stephens (1950) reported 41%. The decline of percentages of abortive cases with age was statistically not significant in our material. As it is plausible that a few of the young asymptomatic patients eventually will become symptomatic, a similarly small amount of sibs might become detectably affected though asymptomatic with advancing age, but the majority of the asymptomatic patients appear to remain so during their lives.

The mean age of onset of the disease, calculated from the reported age of onset of first symptoms, was 17.0 years in the symptomatic patients (15.8 years in males and 19.0 years in females). Regression analysis of the segregation data of the cohort ages in 84 symptomatic and asymptomatic patients and in 80 of their healthy sibs resulted in a mean age at onset of -9 years, assuming that the relation between age at onset and percentage of affected cases is represented by an S-shaped curve. This odd figure is caused by the fact that already in the second decade all expected cases could be diagnosed. Both the cumulative percentages of symptomatic patients, and the regression analysis might be used to calculate genetic risks at different ages.

We observed no patients with infantile onset of FSHD as reported by Brooke (1977), i.e. facial involvement within the first two years of life, followed by a rapid progression of facial and limb muscle weakness, leading to dependence on a wheelchair by the end of the first decade. However, there were several patients in our material who developed symptoms before the age of seven, which was reported to be the earliest age to detect muscle weakness in gene carriers (Tyler and Stephens, 1950; Becker, 1953). Our observations are in agreement with those of Landouzy and Dejerine (1885), who reported onset before the age of five. The above-mentioned regression analysis, resulting in a mean age at onset of -9 years, and anamnestic data on a few patients suggested that an infantile onset is within the possibilities of the disorder represented by our patients. In our opinion, the onset of the disease may be observed from the first

to the last year in life.

In the majority of cases the course of the disease was reported to be relentlessly progressive, Occasionally, long periods of arrest were noted, but their occurrence was rare. The rate of progression was quite variable. The average duration of spread from the shoulder girdle to the foot extensors was 8.8 years and from the foot extensors to the pelvic girdle muscles 9.8 years (Table 4.22.). The stages of the disease, as described above, reflect disability as well. As could be expected, disability increases with age and duration of the disease. Although a fair percentage of asymptomatic cases was found in the seventh decade (30%), at least 20% of the patients in this decade will be unable to climb stairs. Total loss of the ability to walk is rare and occurred in 6% of all cases. Death of patients belonging to the kindreds under study apparently had not been related to the disease. No significant influence of the disease on the age at death could be detected.

Analysis of the segregation data in the extensively studied sibships suggested complete penetrance. Personal experiences in the examination of the families testified to the possible biases in the examiner and, at the same time, suggested that the penetrance is more likely to be almost complete (98-99%). The possibility of an almost complete penetrance is supported by the regression analysis on the cohort ages of the segregation data in the extensively studied sibships. In this analysis 97.5% of the heterozygotes have come to expression at the age of 57, but the standard errors were rather large.

Becker (1953) reported women to be less severely affected than men, and Chung and Morton (1959) reported a significant difference between the age of onset in males (16.8 years) and in females (13.7 years). We found no significant differences between the sexes on the items of age of onset, number of asymptomatic cases, and severity of the disease. A significant difference was found on the numbers of probands only (fifteen males, four females). The reason for this finding is unclear.

Grounds to suggest heterogeneity could not be found in our material. Also the intraclass correlation for the age of onset,

comparing sibships with individuals, gave no arguments for heterogeneity. This intraclass correlation (0.24875) suggested that environmental factors could play a role in the onset of the disease. Also, the significant asymmetry of shoulder girdle and arm involvement (described above) might be caused by environmental factors.

Fitness, judged by the number of offspring of children of an affected parent, appeared normal in patients with FSHD, compared to their healthy sibs. Genealogical investigations, going back an average of 180 years, suggested that none of the families were related. If mutations are the main factor in the emergence of new kindreds with FSHD and if fitness had been normal in the past, one would have expected to encounter more large kindreds. They were not found and this inconsistency is not well explained. The prevalence of FSHD in the province of North-Holland in the Netherlands was estimated to be at lease 1 in 46.000. From the data available it appears that less than 45% of the kindreds have been found.

Summary

Observations in 107 patients with facioscapulohumeral disease (Landouzy-Dejerine's disease or facioscapulohumeral muscular dystrophy) enabled us to summarize this disease as follows:

- The mode of inheritance is autosomal dominant.
- The majority of our patients (82%) had presenting symptoms of shoulder girdle weakness. Symptoms, other than inability to whistle, suggesting facial onset were reported in 10% of the cases: 8% of the patients had presenting symptoms of foot extensor weakness. Presenting symptoms of pelvic girdle weakness have never been reported. Inability to whistle never was a complaint, although 50% of our patients never had been able to whistle and 12% lost this ability in the course of their disease. Four patients related episodes of shoulder pain to the onset of the disease.
- On physical examination 94% of the patients had facial weakness: in eight patients (7%) this was the only sign of the disease. Shoulder girdle weakness was present in 93%, foot extensor weakness in 67% and pelvic girdle weakness in 50% of the patients.
- The disease has a descending order of muscle involvement. It is probable that facial weakness is the earliest detectable sign in the majority of cases but as facial weakness rarely leads to complaints, only longitudinal studies could prove such a statement. The truncal or limb muscles first to become involved are the scapular fixators, the pectoralis major and the latissimus dorsi. On examination the cases presenting with symptoms of foot extensor weakness had shoulder girdle weakness as well. Early abdominal muscle weakness was common in our patients.
- The further spread of muscle involvement may occur in two ways. The majority of patients show early foot extensor weakness and,

subsequently, pelvic girdle involvement. In a few patients the reverse sequence is observed. Both sequences may be observed within one family.

- The course of the disease is steadily progressive in the majority of the symptomatic patients. The rate of progression is quite variable. Long periods of apparent arrest of the disease have been reported by our patients, but they do not occur frequently. Also, a very rapidly progressive course is rare and occurred in only one patient in this material. The average duration of spread from shoulder girdle to foot extensor involvement was 8.8 years (range 0-28 years), and from foot extensor to pelvic girdle involvement was 9.8 years (range 0-33 years).
- Thirty-two percent of the patients were abortive cases, defined as affected but asymptomatic patients. The difference between males (13 cases) and females (21 cases) was statistically not significant. It is probable that the majority of these cases will remain asymptomatic.
- The average age of onset, based on symptoms, was 17.0 years in our patients, which is in agreement with the findings in the literature. The difference between the age of onset in males (15.8 years) and in females (19.0 years) was statistically not significant. The age of onset varied from three to 44 years. Onset in infancy is possible and part of the disease.
- Asymmetric involvement of the shoulder and arm muscles was frequently observed. The right side was significantly more frequently more severely involved than the left side. This asymmetry was significantly correlated with handedness, but was not related to the body side.
- Pseudohypertrophy of muscles was rare. Calf hypertrophy with weakness was observed in two cases (2%).
- Ankle contractures were present in ten cases (10%). Contractures of other muscles are extremely rare.
- No evidence was found to suggest cardiac muscle involvement.
- Men and women were equally affected. There were no sex-differences in severity of involvement. The only significant difference between the sexes was observed in the number of

probands (15 males, 4 females).

- The penetrance was almost complete. Gene carriers that will not come to expression in a lifetime are rare, and probably do not exceed 2%.
- Fitness, judged by offspring, was normal in our patients with FSHD compared to their non-affected sibs.
- The prevalence of the disease in the province of North-Holland (The Netherlands) was at least 1 in 46.000 individuals. It is estimated that less than 45% of the kindreds have been found. This would bring the estimated prevalence in the province of North-Holland at at least 1 in 21.000 individuals.
- Disability increases with age and duration of the disease. Complete loss of the ability to walk occurred in 6% of our cases.
- The life span of the patients is probably not influenced by the disease.
- The serum creatine kinase activity was normal in 34% of the cases, and rarely exceeded four times the upper limit of normal. The level of the creatine kinase activity declined significantly with age and duration of the disease.
- Linkage between the locus for FSHD and the loci for 35 genetic markers has not been demonstrated. The highest lod-score (1.428) was obtained for GM at θ 0.20.
- Electromyography revealed no abnormalities in four patients (13%). A myopathic pattern was present in 23 patients (74%), and both myopathic and neurogenic features were recorded in three patients (10%). One patient (3%) revealed a neurogenic pattern due to a diabetic polyneuropathy. The neurogenic changes occurred in some family members and not in others, and are considered to be part of the disease.
- Histology was normal in six muscle biopsies (20%). The other biopsies all showed various degrees of myopathic changes. A low grade of necrosis and an even lower grade of regeneration are striking. Small cell infiltrations of various sizes may be present as well. Small angular fibres, possibly suggesting denervation, were present in six biopsies (20%). Occasionally groups of a few atrophic fibres were found and also moth-eaten

fibres occurred in groups. In addition to the moth-eaten fibres, histochemistry showed poor fibre type differentiation in four (13%) biopsies. The examination of the muscle biopsy may yield an extremely variable picture.

- In this material there were no grounds to assume that facioscapulohumeral disease, as described above, is genetically heterogeneous.
- The differential diagnosis is limited and includes autosomal dominant scapuloperoneal spinal muscular atrophy and autosomal dominant mitochondrial myopathy.
- The pathogenesis and cause of this disease are not known.

Samenvatting

De facioscapulohumerale ziekte (ook wel de ziekte van Landouzy-Dejerine of facioscapulohumerale spierdystrofie genoemd) werd bestudeerd aan de hand van de literatuur en 107 eigen gevallen. Na een historische inleiding (Hoofdstuk 1) werd het klinische beeld, zoals dit uit de literatuur naar voren komt, beschreven in Hoofdstuk 2. Bij veel aandoeningen kan zwakte en atrofie van de facialis musculatuur en van de schoudergordelspieren, het zogenaamde facioscapulohumerale syndroom, op de voorgrond staan; toch is de differentiële diagnose van de facioscapulohumerale ziekte beperkt, mits het totale klinisch beeld en het erfelijkheidspatroon in de overwegingen betrokken worden. Het facioscapulohumerale syndroom wordt besproken in Hoofdstuk 3. In het vierde Hoofdstuk worden de resultaten van het klinische en het genetische onderzoek bij 107 patiënten uit 19 families beschreven. Hoofdstuk 5 laat de resultaten zien van het onderzoek van de serum creatine kinase aktiviteit, de resultaten van het koppelingsonderzoek en de resultaten van het hulponderzoek (electromyografie en spierbiopsie) bij sommige van deze patiënten. De resultaten van ons eigen onderzoek maken het mogelijk om de facioscapulohumerale ziekte als volgt samen te vatten:

- Het overervingspatroon is autosomaal dominant.
- Bij de meeste patiënten zijn de eerste klachten het gevolg van zwakte van de schoudergordelspieren. Dit werd door 82% van onze patiënten gemeld; 10% van onze patiënten bemerkte als eerste verschijnsel klachten die wezen op zwakte van de facialis musculatuur en 8% van de patiënten klachten die wezen op zwakte van de voetheffers. Niet kunnen fluiten was nooit een klacht, hoewel 50% van onze patiënten nooit heeft kunnen fluiten en 12% deze vaardigheid in de loop van de ziekte kwijt raakte. Vier patiënten brachten een periode van schouderpijn in verband met

het begin van de ziekte. Klachten, die wijzen op een zwakte van de bekkengordelspieren, werden niet vermeld in verband met het begin van de ziekte.

- Bij lichamelijk onderzoek bleek 94% van de patiënten zwakte van de facialis musculatuur te hebben; bij acht patiënten (7%) was dit het enige teken van de ziekte. Zwakte van de schoudergordelspieren werd gevonden bij 93%, zwakte van de voetheffers bij 67% en zwakte van de bekkengordelspieren bij 50% van de patiënten.
- De ziekte breidt zich van boven naar beneden uit. Waarschijnlijk is in de meeste gevallen zwakte van de facialis musculatuur het eerste verschijnsel, maar omdat dit zelden tot klachten leidt, kan alleen longitudinaal onderzoek dit met zekerheid vaststellen. De spieren van de romp en de ledematen, die het eerst zijn aangedaan, zijn de m. serratus anterior, de m. rhomboïdeus en het onderste deel van de m. trapezius. Zij fixeren de scapula bij bewegingen van de arm. Daarnaast zijn ook de m. pectoralis major en de m. latissimus dorsi vroeg aangedaan. In die gevallen, waarbij de eerste klachten veroorzaakt werden door zwakte van de voetheffers blijkt bij onderzoek reeds een zwakte van de schoudergordelspieren te bestaan. Zwakte van de buikspieren was een vroeg verschijnsel bij onze patiënten.
- De verdere uitbreiding van de aandoening vindt op twee manieren plaats: de meeste patiënten ontwikkelen eerst een zwakte van de voetheffers en daarna een zwakte van de bekkengordelspieren; bij enkele patiënten vindt de omgekeerde volgorde plaats. Beide manieren kwamen binnen één en dezelfde familie voor, zodat hieraan geen argumenten ontleend kunnen worden dat de ziekte genetisch heterogeen zou zijn.
- In de meerderheid van onze symptomatische patiënten was de ziekte gestaag progressief. De snelheid van de progressie was zeer variabel. Slechts af en toe werden lange perioden van schijnbare stilstand van de ziekte gemeld. Zelden, en in ons materiaal bij één patiënt, werd een snel progressief beloop waargenomen. Het uitbreiden van de ziekte van de schoudergordel naar de voetheffers duurde bij onze patienten gemiddeld 8,8

jaar (variërend van 0 tot 28 jaar) en van de voetheffers naar de bekkengordel 9,8 jaren (variërend van 0 tot 33 jaar).

- Twee-en-dertig procent van onze patiënten had geen klachten. Dit zijn de zgn. abortieve of asymptomatische gevallen. Het verschil tussen mannen (13 patiënten) en vrouwen (21 patiënten) was statistisch niet signigifant. Het is waarschijnlijk dat de meerderheid van deze patiënten asymptomatisch blijft.
- De gemiddelde beginleeftijd van de ziekte, beoordeeld naar klachten, was 17,0 jaar. Dit getal stemt overeen met de gegevens in de literatuur. Het verschil tussen de beginleeftijd bij mannen (15,8 jaar) en die bij vrouwen (19,0 jaar) was statistisch niet significant. De beginleeftijd varieerde van drie tot 44 jaar. Op grond van gegevens uit ons materiaal lijkt het zeer wel mogelijk dat de ziekte zich binnen de eerste twee levensjaren kan openbaren.
- De schoudergordel- en armspieren bleken vaak asymmetrisch te zijn aangedaan. De rechter kant was statistisch significant ernstiger aangedaan dan de linker kant. Deze voorkeur was statistisch significant gecorreleerd met rechts- of linkshandigheid. Ook de bekkengordel- en beenspieren waren vaak asymmetrisch aangedaan, maar hier bleek geen significant verschil tussen links en rechts te bestaan. De voorkeur voor de rechter schouder en arm leek niet bepaald door een voorkeur voor de rechter lichaamshelft.
- Pseudohypertrofie van spieren komt zelden voor bij deze aandoening. Hypertrofie van de kuitspieren met parese werd bij twee van onze patiënten (2%) waargenomen.
- Contrakturen van de enkel werden waargenomen bij tien patiënten (10%). Bij drie patiënten had dit geleid tot de eerste klachten van deze ziekte. Contrakturen op andere plaatsen zijn zeer zeldzaam.
- In ons materiaal werden geen aanwijzingen gevonden dat ook het hart is aangedaan bij deze ziekte.
- Mannen en vrouwen waren even vaak aangedaan. Ook was er geen verschil tussen mannen en vrouwen wat betreft de ernst van de aandoening. Het enige statistisch significante verschil werd gevonden in het aantal probanden, n.l. 15 mannen versus vier

vrouwen.

- De penetrantie in ons materiaal was bijna compleet. Het aantal dragers dat niet tot expressie komt is waarschijnlijk niet groter dan 2%.
- De "fitness", beoordeeld naar de grootte van het nageslacht, was bij patiënten uit ons materiaal, vergeleken met hun niet aangedane broers of zusters, normaal.
- De prevalentie van de ziekte in de provincie Noord-Holland was tenminste 1 per 46.000 individuen. Het is waarschijnlijk dat minder dan 45% van de families met deze ziekte gevonden zijn. De geschatte prevalentie in Noord-Holland zou dan ten minste 1 per 21.000 individuen zijn.
- De invaliditeit ten gevolge van de aandoening neemt toe met de leeftijd en de duur van de aandoening; 6% van onze patiënten kon niet meer lopen. Overeenkomstige getallen worden vermeld in de literatuur.
- De gemiddelde levensverwachting van de patiënten wordt waarschijnlijk niet beïnvloed door de ziekte.
- De serum creatine kinase aktiviteit was normaal bij 34% van de patiënten en was zelden hoger dan vier maal de bovengrens van normaal. Het niveau van creatine kinase aktiviteit daalde statistisch significant met het toenemen van de leeftijd en de duur van de ziekte.
- Koppeling van het gen voor de ziekte met één van de 35 bestudeerde merkgenen kon niet worden aangetoond. De hoogste positieve lod-score (1,428) werd gevonden voor GM bij θ 0.20.
- Electromyografie leverde geen afwijkingen op bij vier patiënten (13%). Bij 23 patiënten (74%) werd uitsluitend een myopathisch patroon waargenomen en bij drie patiënten (10%) in sommige spieren een myopathisch patroon en in andere spieren een neurogeen patroon. Bij één patiënt (3%) werd een neurogeen patroon in de distale spieren van de extremiteiten toegeschreven aan een diabetische polyneuropathie. Het neurogene patroon werd alleen bij sommige familieleden aangetroffen en moet beschouwd worden als een onderdeel van de ziekte.
- Het histologisch onderzoek van spierbiopsieën was normaal bij

zes patiënten (20%). Alle andere biopsieën lieten in wisselende graden van ernst myopathische veranderingen zien. Er waren opvallend weinig tekenen van necrose en nog minder van regeneratie. Infiltraten van verschillende omvang werden regelmatig waargenomen. Kleine angulaire vezels waren aanwezig in zes biopsieën (20%). Dergelijke vezels suggereren denervatie; hun betekenis bij deze ziekte is onduidelijk. Een enkele maal werden groepjes atrofische vezels gezien en regelmatig werden z.g. "moth-eaten fibres" in groepjes aangetroffen. Bovendien bleek bij vier biopsieën (13%) differentiatie van de vezeltypen niet goed mogelijk. De spierbiopsie levert bij deze aandoening een zeer variabel beeld op; een neurogene factor lijkt hierbij mee te spelen en behoort bij deze ziekte.

- Op grond van onze waarnemingen zijn er geen redenen om aan te nemen dat de facioscapulohumerale ziekte genetisch heterogeen is.
- De differentiële diagnose is beperkt en bestaat uit autosomaal dominante scapuloperoneale spinale spieratrofie en autosomaal dominante mitochondriale myopathie.
- De pathogenese en de oorzaak van deze ziekte zijn niet bekend.

Curriculum vitae

The author of this study was born September 16th, 1948 in Wassenaar, The Netherlands. After secondary schooling (Gymnasium B), he started the study of medicine at the State University of Leiden in 1966. The Dutch medical licence examination (arts-examen) was passed in January, 1974. He was introduced to Neurology by his father during several months of residency at the "St. Annadal" Hospital in Maastricht. From July 1974 till July 1975 the author was a rotating intern at Baylor College of Medicine, Houston, Texas, USA, and obtained the Texas Medical Licence in August 1975. Subsequently he fulfilled his military service of which 12 months were spent as resident in Neurology at the Central Military Hospital, "Dr. A. Mathijsen" in Utrecht. The residency in Neurology was continued at the Department of Neurology of the "Wilhelmina Gasthuis" in Amsterdam. In his last year of training he was a resident in Psychiatry at the Psychiatric Hospital "Endegeest" in Oegstgeest. In May 1980 he was licenced to practice Neurology. At present he is a staff-neurologist at the University Hospital in Leiden.

Acknowledgements

I am indebted to many for their help and support in completing this study. I hope that I have expressed my gratitude properly in personal encounters. Without intentions to neglect somebody, I would like to thank several persons in particular:

Dr. A.R. Wintzen, for his interest in this study, for his stimulating critical remarks, and for offering the opportunity to study several of his patients,

Mr. W.S. Volkers, for the statistical analyses of this study and his stimulating ideas on mathematical genetics,

Mr. L.P. Kuyt, for his meticulous work in completing the genealogical data,

Mrs. Betty Robertson, who patiently and friendly suggested to change some of my double-Dutch English,

Miss A. van Zuiden, who retrieved a great deal of the literature,

Miss M.E. van Hoogevest, Miss D.J. Miedema, Mrs. K.N. Wagensveld-Hansen and particularly Mrs. I. Harlaar-Kiela, Miss H.J. van Egmond and Miss N.N. van der Voorst for their secretarial assistence,

Mr. A.J. Rhijnsburger, for the preparation of the figures and some of the pedigrees,

Mr. G.J. Giessen, for his support in the art of photography,

All technicians and staff members of the laboratories that have been involved in this study: they are

the laboratories of blood group genetics (Head: Prof. Dr. L.E. Nijenhuis) and of immunogenetics (Head: Dr. E. van Loghem) of the Central Laboratory of the Bloodtransfusion Service of the Dutch Red Cross,

the laboratories of biochemical genetics (Head: Prof. Dr. L. Bernini) and of enzyme genetics (Head: Dr. P. Meera Khan) of the Department of Human Genetics of the University of Leiden,

the HLA-typing laboratory (Head: Ir. G.M.Th. Schreuder) of the Department of Immunohaematology and Blood Bank of the University of Leiden,

the laboratory (Head: Dr. Ir. J.C. Pronk) of the Department of Human Genetics of the Free University in Amsterdam.

the Central Laboratory of Clinical Chemistry (Head: Dr. J.H.M. Souverijn) of the University Hospital in Leiden,

the laboratory (Head: Prof. Dr. H.J. van der Helm) of the Department of Neurology of the University of Amsterdam,

the neurophysiological laboratories of the University of Amsterdam (Head: Dr. W.J.M. Hootsmans) and the University of Leiden (Head: Prof. Dr. H.A.C. Kamphuisen),

the "Muscle Research Center" (Head: Prof. Dr. J. Bethlem) of the University of Amsterdam,

the laboratory of neuro-pathology of the University of Leiden (Head: Prof. Dr. G.Th.A.M. Bots).

Prof. Dr. J. Bethlem suggested this study, and kindly made available the records of several probands.

The "Ariëns Kappers Fonds" has supported the publication of this study.

References

Achari, A.N., Anderson, M.S. Myopathic changes in amyotrophic lateral sclerosis.
Pathological analysis of muscle biopsy changes in 111 cases. Neurology (Minneap.) 1974, 24: 477-481.

Alberts, M.C., Samaha, F.J. Serum pyruvate kinase in muscle disease and carrier state. Neurology (Minneap.) 1974, 24: 462-464.

Allensworth, D.C., Rice, D.J., Lowe, G.W. Persistent atrial standstill in a family with myocardial disease. Amer. J. Med. 1969, 47: 775-784.

André, J.M., André, M., Floquet, J., Tridon, P., Arnould, G. Les amyotrophies scapulo-péronéales. Ann. Méd. Nancy 1972, 11:925-938.

Arts, W.F. Nemaline Myopathie. Thesis 1976.

Arts, W.F., Bethlem, J., Dingemans, K.P., Eriksson, A.W. Investigations on the inheritance of nemaline myopathy. Arch. Neurol. (Chic.) 1978, 35: 72-77.

Baldwin, B.J., Talley, R.C., Johnson, C., Nutter, D.O. Permanent paralysis of the atrium in a patient with facioscapulohumeral muscular dystrophy. Amer. J. Cardiol. 1973, 31: 649-653.

Ballantyne, J.P., Hansen, S. A new method for the estimation of the number of motor units in a muscle. Control subjects and patients with myasthenia gravis. J. Neurol. Neurosurg. Psychiat. 1974, 37: 907-915.

Ballantyne, J.P., Hansen, S. A new method for the estimation of

the number of motor units in a muscle. Duchenne, limb-girdle, facioscapulohumeral and myotonic muscular dystrophies. J. Neurol. Neurosurg. Psychiat. 1974, 37: 1195-1201.

Ballantyne, J.P., Hansen, S. Computer method for the analysis of evoked motor unit potentials. Control subjects and patients with myasthenia gravis. J. Neurol. Neurosurg. Psychiat. 1974, 37: 1187-1194.

Ballantyne, J.P., Hansen, S. Computer method for the analysis of evoked motor unit potentials. Duchenne, limb-girdle, facioscapulohumeral and myotonic muscular dystrophies. J. Neurol. Neurosurg. Psychiat. 1975, 38: 417-428.

Barwick, D.D., Walton, J.N. Polymyositis. Amer. J. Med. 1963, 35: 646-660.

Bates, D., Stevens, J.C., Hudgson, P. "Polymyositis" with involvement of facial and distal musculature. J. Neurol. Sci. 1973, 19: 105-108.

Becker, P.E. Dystrophia Musculorum Progressiva. Eine genetische und klinische Untersuchung der Muskeldystrophien. Georg Thieme Verlag, Stuttgart 1953.

Becker, P.E., Lenz, F. Zur Schätzung der Mutationsrate der Muskeldystrophien. Zeitschrift für menschliche Vererbungs- und Konstitutions-lehre 1955, 33: 42-56.

Becker, P.E., Lenz, F. Zur Schätzung der Mutationsrate der Muskeldystrophien. Zeitschrift für menschliche Vererbungs- und Konstitutions-lehre 1956, 33: 463-464.

Bell, J. On age of onset and age of death in hereditary muscular dystrophy with some observations bearing on the question of antedating. Ann. of Eugen. 1942, 11: 272-289.

Bell, J. On pseudohypertrophic and allied types of progressive muscular dystrophy. Treasure of human inheritance. Ed. R.A. Fisher, Vol. 4, Part IV, Cambridge University Press 1943; pp. 283-306.

Bethlem, J., Posthumus Meyjes, F.E. Congenital, non-progressive central core disease of Shy and Magee. Psychiat. Neurol. Neurochir. 1960, 63: 246-251.

Bethlem, J., van Wijngaarden, G.K. The incidence of ringed fibres and sarcoplasmic masses in normal and diseased muscle. J. Neurol. Neurosurg. Psychiat. 1963, 26: 326-332.

Bethlem, J., van Gool, J., Hülsmann, W.C., Meijer, A.E.F.H. Familial non-progressive myopathy with muscle cramps after excerise. A new disease associated with cores in the muscle fibres. Brain 1966, 89: 569-588.

Bethlem, J., van Wijngaarden, G.K., Meijer, A.E.F.H., Hülsmann, W.C. Neuromuscular disease with type 1 fibre atrophy, central nuclei and myotube-like structures. Neurology (Minneap.) 1969, 19: 705-710.

Bethlem, J. Muscle pathology. Introduction and atlas. Amsterdam, North Holland Publishing Co. 1970.

Bethlem, J., van Wijngaarden, G.K., Meijer, A.E.F.H., Fleury, P. Observations on central core disease. J. Neurol. Sci. 1971, 14: 293-299.

Bethlem, J., van Wijngaarden, G.K., de Jong, J. The incidence of lobulated fibres in the facioscapulohumeral type of muscular dystrophy and the limb-girdle syndrome. J. Neurol. Sci. 1973, 18: 351-358.

Bethlem, J. Myopathies. Amsterdam, North-Holland Publishing Co. 1977.

Bethlem, J., Arts, W.F., Dingemans, K.P. Common origin of rods, cores, miniature cores and focal loss of cross striation. Arch. Neurol. (Chic.) 1978, 35: 555-566.

Bloomfield, D.A., Sinclair Smith, B.C. Persistent atrial standstill. Amer. J. Med. 1965, 39: 335-340.

Bohan, A., Peter, J.B. Polymyositis and dermatomyositis. N.E.J.M. 1975, I. 292: 344-347; II 292: 403-407.

Bouwsma. G. Spinale spieratrophie. Verloop en prognose. Thesis 1978.

Boyes, J.W., Fraser, F.C., Lawler, S.D., Mackenzie, H.J. A pedigree of progressive muscular dystrophy. Ann. Eugen. (London) 1950, 15: 46-51.

Bradley, W.G., Tomlinson, B.E., Hardy, M. Further studies of mitochondrial and lipid storage myopathies. J. Neurol. Sci. 1978, 35: 201-210.

Caspary, E.A., Currie, S., Field, E.J. Sensitised lymphocytes in muscular dystrophy: evidence for a neural factor in pathogenesis. J. Neurol. Neurosurg. Psychiat. 1971, 34: 353-356.

Chakrabarti, A., Pearce, J.M.S. Scapuloperoneal syndrome with cardiomyopathy: report of a family with autosomal dominant inheritance and unusual features. J. Neurol. Neurosurg. and Psychiat. 1981, 44: 1146-1152.

Chung, C.S., Morton, N.E. Discrimination of genetic entities in muscular dystrophy. Amer. J. Hum. Genetics 1959, 11: 339-359.

Chyatte, S.B., Vignos, P.J., Watkins, M. Early muscular dystrophy: differential patterns of weakness in Duchenne, limb-girdle and facioscapulohumeral types. Arch. Phys. Med. 1966, 47:

499-503.

Coërs, C., Telerman Toppet, N.,Gerard, J.M. Terminal innervation ratio in neuromuscular disease. Methods and controls. Arch. Neurol. (Chic.) 1973, 20: 210-214.

Coërs, C., Telerman Toppet, N., Gerard, J.M. Terminal innervation ratio in neuromuscular disease. Disorders of lower motor neuron, peripheral nerve and muscle. Arch. Neurol. (Chic.) 1973, 29: 215-222.

Coërs, C., Woolf, A.L. Pathological anatomy of the intramuscular motor innervation. In: Disorders of Voluntary Muscle, Fourth edition, Chapter 7. Ed: Sir John Walton, Churchill Livingstone 1981.

Cook, P.J.L., Robson, E.B., Rogers, P.A., Noades, J.E., Buckton, K.E., Watson, A.R. Family studies on nucleoside phosphorylase and the short arm of chromosome 14. Ann. Hum. Genet. 1981, 45: 253-260.

Copeland, S.A., Howard, R.C. Thoracoscapular fusion for facioscapulohumeral dystrophy. J. Bone Jt. Surg. 1978, 60B: 547-551.

Croce. C.M., Shander, M., Martinis, J., Cicurel, L., D'Ancona, G.G., Dolby, Th.W., Kopronski, H. Chromosomal location of the genes for human immunoglobulin heavy chains. Proc. Natl. Acad. Sci. USA 1979, 76: 3416-3419.

Cumming, W.J.K., Weiser, R., Teoh, R., Hudgson, P., Walton, J.N. Localized nodular myositis: a clinical and pathological variant of polymyositis. Quart J. of Med. 1977, 184: 531-546.

Currie, S. Destruction of muscle cultures by lymfocytes from cases of polymyositis. Acta Neuropathologica 1970, 15: 11-19.

D'Agostino, A.N., Ziter, F.A., Rallison, M.L., Bray, P.F. Familial myopathy with abnormal muscle mitochondria. Arch. Neurol. (Chic.) 1968, 18: 388-401.

Dastur, D.B., Razzak, Z. Possible neurogenic factor in muscular dystrophy: its similarity to denervation atrophy. J. Neurol. Neurosurg. Psychiat. 1973, 36: 399-410.

Daube, J. The description of motor unit potentials in electromyography. Neurology (Minneap.) 1978, 28: 623-625.

Davidenkow, S. Über die neurotische Muskelatrophie Charcot-Marie. Klinisch-genetische studien. Zeitschrift für die gesamte Neurologie und Psychiatrie 1927, 107: 259-320.

Davidenkow, S. Über die scapulo-peroneal Amyotrophie (Die Familie Z). Zeitschrift für die gesamte Neurologie und Psychiatrie 1929, 122: 628-650.

Davidenkow, S. Über die Vererbung der Dystrophia Musculorum Progressiva und ihrer Unterformen. Arch. Rassenbiol. 1930, 22-32.

Davidenkow, S. Scapuloperoneal amyotrophy. Arch. Neurol. Psychiat. 1939, 41: 694-701.

Davidenkow, S. Klinik und Therapie der progressiven Muskelatrophien. Staatsverlag Medizinischen Literatur, Medgis Leningrad 1954, (Cited by Fotopulos and Schulz).

Delwaide, P.J., Schoenen, J. Atrophie scapulo-péroniere sporadique d'origine myogene. Rev. Neurol. 1976, 132: 424-429.

Bradley, W.G. The limb-girdle syndromes. Handbook of Clinical Neurology. Ed: Vinken, P.J. and Bruyn, G.W. Vol. 40, chapter 11 North-Holland Publishing Co. 1979.

Brooke, M.H., Engel, W.K. Diagnosis of neuromuscular disease. A

review of 79 biopsies. Arch. Phys. Med. 1966, 47: 99-121.

Brooke, M.H. A clinician's view on neuromuscular disease. Williams and Wilkins Co., Baltimore, 1977.

Brown, M.R. Incidence and heredity of muscular dystrophy. N.E.J.M. 1951, 244: 88-90.

Buchthal, F., Rosenfalck, P., Erminio, F. Motor unit territory and fibre density in myopathies. Neurology (Minneap.) 1960, 10: 398-408.

Buchthal, F., Rosenfalck, P. Electrophysiological aspects of myopathy with particular reference to progressive muscular dystrophy. In: Muscular Dystrophy in Man and Animals. Eds: Bourne, G.H. and Golarz, N., S. Karger, New York, 1963.

Buchthal, F., Kamieniecka, Z. The diagnotic yield of quantified electromyography and quantified muscle biopsy in neuromuscular disorders. Muscle and Nerve 1982, 5: 265-280.

Bunch, W.H. Scapulo-thoracic fusion for shoulder stabilisation in muscular dystrophy. Minnesota Medicine 1973, 56: 391-394.

Bundey, S. Paralysis, progressive bulbar of childhood (Facio-Londe disease). In: Handbook of Clinical Neurology. Eds. Vinken, P.J., and Bruyn, G.W., Vol. 42, pp. 94-95, North-Holland Publishing Co. 1981.

Camman, R., Vehreschild, T., Ernst, K. Eine neue Sippe von X-chromosomaler benigner Muskeldystrophie mit Frühkontrakturen (Emery-Dreifuss). Psychiat. Neurol. Med. Psychol. (Leipzig) 1974, 26: 431-438.

Caponetto, S., Pastorini, C., Tirelli, G. Persistent atrial standstill in a patient affected with facioscapulohumeral muscular dytrophy. Cardiologia (Basel) 1968, 53: 341-350.

Carroll, J.E. Facioscapulohumeral and scapuloperoneal syndromes. In: Handbook of Clinical Neurology. Eds: Vinken, P.J. and Bruyn, G.W., Vol. 40, Chapter 10, North-Holland Publishing Co. 1979.

Carroll, J.E., Brooke, M.H., Devivo, D.C., Shumate, J.B., Kratz, R., Ringel, S.P., Hagberg, J.M. Carnitine "deficiency": lack of response to carnitine therapy. Neurology (Minneap.) 1980, 30: 618-626.

DeVere, R., Bradley, W.G. Polymyositis: its presentation, morbidity and mortality. Brain 1975, 98: 637-666.

Drachman, D.A., Murphy, S.R., Nigam, M.P., Hills, J.R. Myopathic changes in chronically denervated muscle. Arch. Neurol. (Chic.) 1967, 16: 12-24.

Drachman, D.A. Ophthalmoplegia plus: neurodegenerative disorders associated with progressive external ophthalmoplegia. Arch. Neurol. (Chic.) 1968, 18: 654-674.

Dubowitz, V., Platts, M. Central core disease of muscle with focal wasting. J. Neurol. Neurosurg. Psychiat. 1965, 28: 432-437.

Dubowitz, V., Brooke, M.H. Muscle biopsy; a modern approach. Saunders, London, 1973.

Duchenne, G.B. De l'électrisation localisée. Deuxiéme Edition, J.B. Baillière et fils, Paris, 1861.

Duchenne, G.B. Recherches sur la paralysie musculaire pseudo-hypertrophique, ou paralysie myo-sclérosique. Arch. Gén. Méd. 1868, 11: 5, 179, 305, 421, 552.

Dyck, P.J., Lambert, E.H., Mulder, D.N. Charcot-Marie-Tooth disease: nerve conduction and clinical studies of a large kinship. Neurology (Menneap) 1963) 1963, 13:1-11.

Edwards, R., Young, A., Wiles, M. Needle biopsy of skeletal muscle in the diagnosis of myopathy and the clinical study of muscle function and repair. N.E.J.M. 1980, 302: 261-271.

Eisenlohr, C. Über progressive Muskelatrophie. Neurol. Zbl. 1889,6: 564-565.

Emery, A.E.H., Dreifuss, F.E. Unusual type of benign X-linked muscular dystrophy. J. Neurol. Neurosurg. Psychiat. 1966, 29: 338-342.

Emery, A.E.H., Walton, J.N. The genetics of muscular dystrophy. In: Steinberg and Bearn: Progress in Medical Genetics. Vol. 5, Chapter 5. Grune and Stratton, New York, 1967.

Emery, A.E.H. The nosology of the spinal muscular atrophies. J. Med. Genet. 1971, 8: 481-495.

Emery, A.E.H. Genetic aspects of neuromuscular disease. In: Disorders of Voluntary muscle. Fourth edition, Chapter 22. Ed. Sir John Walton, Churchill Livingstone, London, 1981.

Emery, E.S., Fenichel, C.M., Eng, G. A spinal muscular atrophy with scapuloperoneal distribution. Arch. Neurol. (Chic.) 1968, 18: 129-133.

Engel, W.K., Foster, J.B., Hughes, B.P., Huxley, H.E., Mahler, R. Central core disease - An investigation of a rare muscle cell abnormality. Brain 1961, 84: 167-185.

Engel, W.K., Kossman, R.J. Selective involvement of histochemical type I muscle fibres in a patient with facioscapulohumeral muscular dystrophy. Neurology (Minneap.) 1963. 13: 362.

Engel, W.K., Resnick, J.S. Late-onset rod myopathy: a newly recognized, acquired and progressive disease. Neurology

(Minneap.) 1966, 16: 308-309.

Engel, W.K. Brief, small, abundant motor unit potentials. Neurology (Minneap) 1975, 25: 173-176.

Erb, W. Über die "juvenile Form" der progressive Muskelatrophie und ihre Beziehungen zur zogenannte Pseudohypertrophie der Muskeln. Dtsch. Arch. klin. Med. 1884, 34: 467-519.

Erbslöh, F. Muskelkrankheiten. In: Differntialdiagnose neurologischer Krankheitsbilder. Ed. G. Bodechtel, Georg Thieme Verlag, Stuttgart, 1974.

Feigenbaum, J.A., Munsat, T.L. A neuromuscular syndrome of scapuloperoneal distribution. Bulletin of the Los Angeles Neurological Society 1970, 35: 47-57.

Fenichel, G.M., Emery, E.S., Hunt, P. Neurogenic atrophy simulating facioscapulohumeral dystrophy (a dominant form). Arch. Neurol. (Chic.) 1967, 17: 257-260.

Fotopulos, D., Schulz, H. Beitrag zur pathogenese des scapuloperoneale Syndromes. Psychiat. Neurol. Med. Psychol. (Leipzig) 1966, 18: 128-136.

Fowler Jr, W.M., Pearson, C.M. Diagnostic and prognostic significance of serum enzymes. Part II. Arch. Phys. Med.1964, 45: 125-130.

Furakawa, T., Tsukagoshi, H., Sugita, H., Toyokura, Y. Neurogenic muscular atrophy simulating facioscapulohumeral muscular dystrophy. J. Neurol. Sci. 1969, 9: 389-397.

Furakawa, T., Toyokura, Y. Chronic spinal muscular atrophy of facioscapulohumeral type. J. Med. Genet. 1976, 13: 285-289.

Furakawa, T., Tsukagoshi, H., Peter, J.B. Facioscapulohumeral

spinal muscular dystrophy. Clinical and genetic studies. Abstracts 12th World Congress of Neurology, Sept. 1981, Kyoto, Japan. Int. Congress. Ser. 548. Excerpta Medica, Amsterdam, Oxford, Princeton.

Gailani, S., Danowski, T.S., Fisher, D.S. The heart in muscular dystrophy. Circulation 1958, 17: 583-588.

Gardner-Medwin, D.P., Hudgson, P., Walton, J.N. Benign spinal muscular atrophy arising in childhood and adolescence. J. Neurol. Sci. 1967, 5: 121-128.

Gedde-Dahl Jr., T., Frants, R.R., Olaisen, B., Eriksson, A.W., van Lochem, E., Lamm, L. The Gm-Pi linkage heterogeneity in view of Pi subtypes. Ann. Hum. Genet. 1981, 45: 143-153.

Gomez, M.R. Progressive bulbar paralysis of childhood (Fazio-Londe disease). In: Handbook of Clinical Neurology. Eds. Vinken, P.J., and Bruyn, G.W. Volume 22, Chapter 5. North-Holland Publishing Co. 1975.

Goulon, M., Fardeau, M., Got, C., Babinet, P., Manko, E. Myopathie centro-nucléaire d'expression clinique tardive. Étude clinique, histologique et ultrastructurale d'une nouvelle observation. Rev. Neurol. 1976, 132: 275-290.

Hanson, P.A., Rowland, L.P. Möbius' syndrome and facioscapulohumeral muscular dystrophy. Arch. Neurol. (Chic.) 1971, 24: 31-39.

Harper, P.S. Myotonic dystrophy. W.B. Saunders Company 1979.

Hausmanowa-Petrusewicz, I., Zielinska, S. Zur nosologische Stellung des scapuloperonealen Syndroms. Dtsch. Z. Nervenheilk. 1962, 183: 377-382.

Hausmanowa-Petrusewicz, I., Jedrzedowska, H. Correlation between

electromyographic findings and muscle biopsy in cases of neuromuscular disease. J. Neurol. Sci. 1971, 13: 85-106.

Heffner, R.R., Barron, S.A. Polymyositis beginning as a focal process. Arch. Neurol. (Chic.) 1981, 38: 439-442.

Henderson, J.L. The congenital facial diplegia syndrome: clinical features, pathology and aetiology. Brain 1939, 62: 381-403.

Hertrich, O. Kasuistische Mitteilung über eine Sippe mit dominant vererblicher, wahrscheinlich weiblich geslechtsgebundener progressive Muskeldystrophie des Schultergurdeltyps. Nervenarzt 1957, 28: 325-327.

Hische, E.A.H., van der Helm, H.J. The significance of the estimation of the serum myoglobin in neuromuscular diseases. J. Neurol. Sci. 1979, 43: 243-251.

Hromada, J., Zemankova, M., Rozhold, O. Proceedings of the Third Symposium on Neuromuscular Disorders at Janské Lázné, September 1973. Ed. Nesvadba, pp 186-194.

Hudgson, P., Bradley, W.G., Jenkinson, M. Familial mitochondrial myopathy. Part I, Clinical, electrophysiological and pathologial findings. J. Neurol. Sci. 1972, 16: 343-370.

Hughes, B.P. Creatine phosphokinase in facioscapulohumeral muscular dystrophy. Brit. Med. J. 1971, 3: 464-465.

Hurwitz, L.J., Carson, N.A.J., Allen, J.V., Fannin, T.F., Lyttle, J.A.,Neill, D.W. Clinical, biochemical and histopathological findings in a family with muscular dystrophy. Brain 1967, 90: 799-816.

Ibrahim, G.A., Zweber, B.A., Awad, E.A. Muscle and serum enzymes and isoenzymes in muscluar dystrophies. Arch. Phys. Med. Rehabil. 1981, 62: 265-269.

Ionasescu, V., Zellweger, H., Shirk, P., Conway, Th.W. Abnormal protein synthesis in facioscapulohumeral muscular dystrophy. Neurology (Minneap.) 1972, 22: 1286-1292.

Ionasescu, V., Lewis, R., Schottelius, B. Neurogenic control of muscle ribosomal protein synthesis. Acta Neurol. Scand. 1975, 51: 253-267.

Ionasescu, V., Zellweger, H. Genetics of neuromuscular diseases. In: Handbook of Clinical Neurology. Eds: Vinken, P.J., and Bruyn, G.W., Vol. 41, Chapter 12. North-Holland Publishing Company, 1979.

Jennekens, F.G.I., Tomlinson, B.E., Walton, J.N. The extensor digitorum brevis: histological and histochemical aspects. J. Neurol. Neurosurg. Psychiat. 1972, 35: 124-132.

Jennekens, F.G.J., Busch, H.F.M., van Hemel, N.M., Hoogland, R.A. Inflammatory myopathy in scapulo-ilio-peroneal atrophy with cardiopathy. A study of two families. Brain 1975, 98: 709-722.

Johnson, W.G., Wigger, M.J., Karp, H.R., Glaubiger, L.M., Rowland, L.P. Juvenile spinal muscular atrophy: a new hexoseaminidase deficiency phenotype. Ann. Neurol. 1982, 11: 11-16.

Justin-Besançon, L., Péguignot, H., Contamin, F., Delavierre, Ph., Rolland, P. Myopathie de type Landouzy-Dejerine. Sem. Hôp. Paris 1964, 55: 2990-2999.

Justin-Besançon, L., Péguignot, H., Contamin, F., Delavierre, Ph, Rolland, P. Myopathie de type Landouzy-Dejerine; Présentation d'une observation historique. Revue Neurologique 1964, 110: 56-57.

Kaeser, H.E. Die familiäre scapuloperoneale Muskelatrophie.

Dtsch. Z. Nervenheilk. 1964, 186: 379-394.

Kaeser, H.E. Scapuloperoneal muscular atrophy. Brain 1965, 88: 407-418.

Kaeser, H.E. Scapuloperoneal syndrome. In: Handbook of Clinical Neurology. Eds. Vinken, P.J. and Bruyn, G.W.,Volume 22, chapter 2, North-Holland Publishing Co. 1975.

Karpati, G., Carpenter, S., Engel, A.G., Watters, G., Allen, J., Rothman, S., Klassen, G., Mamer, O., The syndrome of systemic carnitine deficiency. Neurology (Minneap.) 1975, 25: 16-24.

Kazakov, V.M., Bogorodinsky, D.K., Znoyko, Z.V., Skorometz, A.A. The facio-scapulo-limb (or the facioscapulohumeral) type of muscular dystrophy. Europ. Neurol. 1974, 11: 236-260.

Kazakov, V.M., Bogorodinsky, D.K., Skorometz, A.A. myogenic scapuloperoneal dystrophy - muscular dystrophy in the K-kindred. Europ. Neurol. 1975, 13: 350-359.

Kearns, T.P., Sayre, G.P. Retinitis pigmentosa, external ophthalmoplegia and complete heart block. Unusual syndrome with histologic study in one of two cases. Arch. Ophthal. 1958, 20: 280-289.

Kendall, H.O., Kendall, F.P., Wadsworth G.E., Muscles testing and function. The Williams and Wilkins Company 1971.

Ketenjian A.Y. Scapulocostal stabilisation for scapular winging in facioscapulohumeral muscular dystrophy. J.B. Jnt. Surg. 1978, 60A: 476-480.

Kilburn, K.H., Eagan, J.T., Sieker, H.O., Heyman, A. Cardiopulmonary insufficiency in myotonic and progressive muscular dystrophy. N.E.J.M. 1959, 261: 1089-1095.

Klapdor, R., Harm, K., Müller-Jensen, A., Die Kreatinkinase (CK) MB - gesamt CK Relation als Kriterium für die Differentialdiagnose von Herz- und Skeletmuskelerkrankungen. Herz/Kreisl. 1977, 9: 761-763.

Krüger, H., Franke, M. Facioscapulohumeral Form der neurogene Muskelatrophie. Psychiat. Neurol. Med. Psychol. (Leipzig) 1974, 26: 295-301.

Kugelberg, E., Welander, L. Heredo-familial juvenile muscular atrophy simulating muscular dystrophy. Arch. Neurol. Psychiat. (Chic.) 1956, 75: 500-509.

Lamy, M., de Grouchy, J. L'hérédité de la myopathie (formes basses). J. Gênêt. Hum. 1954, 3: 219-261.

Landouzy, L., Dejerine, J. De la myopathie atrophique progressive (myopathie héréditaire débutant, dans l'enfance, par la face sans altération du système nerveux). C. R. Acad. Sci. (Paris) 1884, 98: 53-55.

Landouzy, L., Dejerine, J. De la myopathie atrophique progressive. Revue de Médecine 1885, 5: 81-117.

Landouzy, L., Dejerine, J. De la myopathie atrophique progressive. Revue de Mêdécine 1885, 5: 253-366.

Landouzy, L., Dejerine, J. De la myopathie atrophique progressive. Revue de Médecine 1886, 6: 977-1027.

Landouzy, L., Lortat Jacob, L. Histoire d'une myopathie atrophique. Presse Méd. 1909, 17: 145-149.

Levison, H. Dystrophia musculorum progressiva. Acta Psychiat. Neurol. Scand. 1951, Suppl. 76.

Lisan, Ph., Imbriglia, J., Likoff, W. Myocardial disease

associated with progressive muscular dystrophy. Amer. Heart J. 1959, 57: 913-920.

Lovelace, R.E., Menken, M. The scapuloperoneal syndrome: dystrophic type. Excerpta Medica International Congress Series 1969, 193: 247-248.

Magee, K.R., de Jong, R.N. Neurogenic muscular atrophy simulating muscular dystrophy. Neurol. (Chic.) 1960, 2: 677-682.

Mair, W.G.P., Tomé, F.M.S. Atlas of the ultrastructure of diseased human muscle. Churchill Livingstone 1972.

Manning, G.W., Cropp, G.L. Electrocardiogram in progressive muscular dystrophy. Brit. Heart. J. 1958, 20: 416-420.

Mares, A., Constantinesco, M., Vasilesco, C., Ionesco, M. Atrophie musculaire heredo-familiale à transmission dominante. Étude clinique, electromyopgrafique et bioptique. Revue Roumaine de Neurologie 1964, 1: 295-307.

Mawatari, S., Katayama, K. Scapuloperoneal muscular atrophy with cardiopathy. An X-linked recessive trait. Arch. Neurol. (Chic.) 1973, 28: 55-59.

Mc Comas, A.J. Neuromuscular function and disorders. Butterworth, London, 1977.

Mc Comas, A.J., Fawcett, P.R.W., Campbell, M.J., Sica, R.E.P. Electrophysiological estimation of the number of motor units within a human muscle. J. Neurol. Neurosurg. Psychiat. 1971, 34: 121-131.

Mc Leod, J.G., de Baker, W.C., Lethlean, A.K., Shorey, C.D. Centronuclear myopathy with autosomal dominant inheritance. J. Neurol. Sci. 1972, 15: 375-387.

Meadows, J.C., Marsden, C.D., Harriman, D.G.F. Chronic spinal muscular atrophy in adults; part 1: the Kugelberg-Welander syndrome. J. Neurol. Sci. 1969, 9: 527-550.

Meadows, J.C., Marsden, C.D., Harriman, D.G.F. Chronic spinal muscular atrophies in adults; part 2: other forms. J. Neurol. Sci. 1969, 9: 551-566.

Meadows, J.C., Marsden, C.D. Scapuloperoneal amyotrophy. Arch. Neurol. (Chic.) 1969, 20: 9-12.

Mechler, F. Changing electromyographic findings during the chronic course of polymyositis. J. Neurol. Sci. 1974, 23: 237-242.

Medical Research Council. Memorandum No. 45. Aids to the examination of the peripheral nervous system. Her Majesty's Stationary Office, London, 1976.

Mercelis, R., de Meester, J., Martin, J.J. Neurogenic scapuloperoneal syndrome in childhood. J. Neurol. Neurosurg. Psychiat. 1980, 43: 888-896.

Mercer, D.W. Separation of tissue and serum creatine kinase isoenzymes by ion-exchange column chromatography. Clin. Chem. 1974, 20: 36-40.

Mingazzini, G. Dystrophie musculaire progressive hémilatérale (type facioscapulohuméral). Nouv. Iconogr. Salpêtrière 1912, 25: 320-222.

Morgan-Hughes, J.A., Brett, E.M., Lake, B.D., Tomé, F.M.S. Central core disease or not? Observations on a family with a non-progressive myopathy. Brain 1973, 96: 527-536.

Morton, N.E., Chung, C.S. Formal genetics of muscular dystrophy. Amer. J. Hum. Genetics 1959, 11: 360-379.

Morton, N.E., Chung, C.S., Peters, H.A. Genetics of muscular dystrophy. In: Muscular Dystrophy in Man and Animals. Ed. G.H. Bourne and N. Golarz, Chapter VIII. Kargers, Basel, 1963.

Moser, von H., Wiesmann, V., Richterich, R., Rossi, E. Progressive Muskeldystrophie. VIII Haufigkeit, Klinik und Genetik der Typen I und III. Scheizer Med. Wschr. 1966, 96: 169-174.

Mumenthaler, M. Didaktischer Atlas der klinischen Neurologie. Springer Verlag 1982.

Munsat, Th.L. Infantile scapuloperoneal muscular atrophy. Neurology (Minneap.) 1968, 18: 285.

Munsat, Th.L., Piper, D. Genetically determined inflammatory myopathy with facioscapulohumeral distribution. Neurology (Minneap.) 1971, 21:440.

Munsat, Th.L., Piper, D., Cancilla, P., Mednick, J. Inflammatory myopathy with facioscapulohumeral distribution. Neurology (Minneap.) 1972, 22: 335-347.

Munsat, Th.L., Baloh, R., Pearson, C.M., Fowler, W., Studies of serum enzyme alterations in neuromuscular disorders. J.A.M.A. 1973, 226: 1536-1543.

Munsat, Th.L., Bradley, W.G. Serum creatine phosphokinase levels and prednisone treated muscle weakness. Neurology (Minneap.) 1977, 17: 96-97.

Münzer, F.Th. Zur Lehre von den angeborenen Muskeldefekten un der sogenannte "neuralen Muskelatrophie". Dtsch. Z. Nervenheilk. 1927, 96: 246.

Nagle, R.E., Smith, B., Williams, D.O. Familial atrial cardiomyopathy with heart block (abstr). Proceedings of the

British Cardiac Society. Brit. Heart J. 1972, 34: 205.

Namba, T., Aberfeld, D.C., Grob, D. Chronic proximal spinal muscular atrophy. J. Neurol. Sci. 1970, 11: 401-423.

Negri, S., Caraceni, T., Cornelio, F. A case of scapulo-tibio-peroneal syndrome: electromyographic and histoenzymologic considerations. Eur. Neurol. (Basel) 1973, 10: 31-40.

Oransky, W. über einen hereditären Typus progressiver Muskeldystrophie. Dtsch. Z. Nervenheilk. 1927, 99: 147-155.

Ott, J. Estimation of the recombination fraction in human pedigrees: efficient computation of the likelihood for human linkage studies. Amer. J. Hum. Genet. 1974, 26: 588-597.

Pamboukis, G. Gehäuftes Auftreten von abortiven Formen (Formes frustes) der Dystrophia musculorum progressiva (Erb) in vier Generationen. Med. Klin. 1931, 27: 209-210.

Panayiotopoulos, C.P., Scarpalezos, S., Papapetropoulos, Th. Electrophsyiological estimation of motor units in Duchenne muscular dystrophy. J. Neurol. Sci. 1974, 23: 89-98.

Panayiotopoulos, C.P., Scarpalezos, S. Muscular dystrophies and motor neuron diseases: a comparative electrophysiological study. Neurology (Minneap.) 1976, 26: 721-725.

Panayiotopoulos, C.P., Scarpalezos, S., The development of the extensor digitorum brevis muscle in progressive proximal muscular atrophies. Acta Neurol. Scand. 1977, 56: 579-586.

Patel, A.N., Swanni, R.K. Muscle percussion and neostigmine test in the clinical evaluation of neuromuscular disorders. N.E.J.M. 1969, 281: 523-526.

Pearn, J. Classification of spinal muscular atrophies. Lancet

1980, I: 919-921.

Pearson, C.M. Polymyositis. Ann. Rev. Med. 1966, 17: 63-82.

Pearson, K. Two new pedigrees of muscular dystrophy. Ann. Eugen. 1933, 5: 179-191.

Pennington, R.J.T. Biochemical aspects of muscle disease. In: Disorders of Voluntary Muscle, Fourth edition, Chapter 12, Ed. Sir John Walton, Churchill-Livingstone, 1981.

Perloff, J.K., de Leon Jr., A.C., O'Doherty, D. The cardiomyopathy of progressive muscular dystrophy. Circulation 1966, 33: 625-648.

Perloff, J.K. Cardiomyopathy associated with heredo-familial neuromyopathic diseases. Mod. Concepts Cardiovasc. Dis. 1971, 40: 23-26.

Price, H.M., van der Velde, R.L. Ultrastructure of skeletal muscle fibre. In: Disorders of Voluntary Muscle. Fourth Edition, Chapter 2. Ed.: Sir John Walton, Churchill Livingstone, 1981.

Prot, J., Genetic-epidemiological studies in progressive muscular dystrophy. J. Med. Genet. 1971, 8: 90-95.

Remak, E. Über die gelegentliche Betheiligung der Gesichtsmuskulatur der juvenilen Form der progressiven Muskelatrophie. Neurol. Zbl. 1884, 3: 337-341.

Ricker, K., Mertens, H.G., Schimrigk, K. The neurogenic scapulo-peroneal syndrome. Eur. Neurol. (Basel) 1968, 1: 257-274.

Ricker, K., Mertens, H.G., The differential diagnosis of the myogenic (facio) scapuloperoneal syndrome. Eur. Neurol. (Basel) 1968, 1: 275-307.

Ringel, S.P. Clinical presentation in neuromuscular disease. In: Handbook of Clinical Neurology. Eds: Vinken, P.J. and Bruyn, G.W. Volume 40, Chapter 8. North-Holland Publishing Co. 1979.

Robinson, A.A. Familial myopathy. Medical Journal and Record 1925, 121: 76-80.

Rothstein, T.L., Carlson, C.B. Restricted myositis with myoedema simulating facioscapulohumeral muscular dystrophy. Neurology (Minneap.) 1970, 20: 386.

Rothstein, T.L., Carlson, C.B., Sumi. S.M. Polymyositis with facioscapulohumeral distribution. Arch. Neurol. (Chic.) 1971, 25: 313-319.

Rothhauwe, H.W., Mortier, W., Beyer, H. Neuer Typ einer recessiv X-chromosomal vererbten Muskeldystrophie: scapulohumerodistale Muskeldystrophie mit frühzeitigen Kontrakturen und Herzrythmusstörungen. Humangenetik 1972, 16: 181-200.

Rowland, L.P. Muscular dystrophies In: Scientific Approaches to Clinical Neurology. Chapter 93. Ed: Eli S. Goldensohn and Stanley H. Appel, Lea and Febiger, Philadelphia, 1977.

Rowland, L.P., Fetell, M., Olarte, M., Hays, A., Singh, N., Wanat, F.E. Emery-Dreifuss muscular dystrophy. Ann. Neurol. 1979, 5: 111-117.

Rowland, L.P., Layzer, R.B. X-linked muscular dystrophies. In: Handbook of Clinical Neurology. Eds: Vinken, P.J. and Bruyn, G.W. Volume 40, Chapter 9. North-Holland Publishing Co. 1979.

Rubin, I.L., Buchberg, A.S. The heart in progressive muscular dystrophy. Amer. Heart J. 1952, 43: 161-169.

Schimrigk, K. Die polymyositis unter den Bilde der facioscapulo-humeralen Muskeldystrophy. Fortschritte der Myologie 1974, 176-

184.

Schott, J., Jacobi, M., Wald, M.A. Electrocardiographic patterns in the differential diagnosis of progressive muscular dystrophy. Amer. J. Med. Sci. 1955, 229: 517-524.

Schuchmann, L. Spinal muscular atrophy of the scapulo-peroneal type. Z. für Kinderheilk. 1970, 109: 118-123.

Schwartz, M.S., Swash, M. Scapuloperoneal atrophy with sensory involvement: Davidenkow's syndrome. J. Neurol. Neurosurg. Psychiat. 1975, 38: 1063-1067.

Seay, A.R., Zoter, F.A., Wu, L.H., Wu, J.T. Serum creatine phosphokinase and pyruvate kinase in neuromuscular disorders and Duchenne dystrophy carriers, Neurology (Minneap.) 1978, 28: 1047-1050.

Seitz, D., Zur Nosologische Stellung der sogenannten scapulo-peronealen Syndroms. Dtsch. Z. Nervenheilk. 1957, 175: 547-552.

Serratrice, G., Monges S., Roux, H., Aquaron R., Gambarelli, D. Forme myopathique du déficit en phosphofruktokinase. Rev. Neurol. 1969, 120: 271-277.

Serratrice, G., Roux, H., Aquaron, R., Gambarelli, D., Baret, J. Myopathies scapulo-péronières. A propos de 14 observations dout 8 avec atteinte faciale. Sem. Hôp. Paris 1969, 45: 2678-2683.

Serratrice, G., Gastaut, J.L., Pellissier, J.F., Pouget, J. Amyotrophies scapulo-péronières chroniques de type Stark-Kaeser. Rev. Neurol. 1976, 132: 823-832.

Shander, M., Martinis, J., Croce, C.M. Genetics of human immunoglobulin: assignment of the genes for , and immunoglobulin chains to human chromosome 14. Transplantation Proceedings 1980. Vol. XII: 417-420.

Shapira, Y., Cederbaum, S.D., Cancilla, P.A., Nielsen., D., Lippe, B.M. Familial poliodystrophy, mitochondrial myopathy, and lactate acidemia. Neurology (Minneap.) 1975, 25: 614-621.

Shy, G.M., Magee, K.R. A new congenital non-progressive myopathy. Brain 1956, 79: 610-621.

Shy, G.M., Engel, W.K., Somers, J.E., Wanko, T. Nemaline myopathy. A new congenital myopathy. Brain 1963, 86: 793-810.

Shy, G.M., Silberberg, D.H., Appel, S.H., Mishkin, M.M., Godfrey, E.H. A generalized disorder of nervous system, skeletal muscle and heart resembling Refsum's disease and Hurler's syndrome. 1. Clinical, pathological and biochemical characteristics. Amer. J. Med. 1967, 42: 163-168.

Sica, R.EP., Mc. Comas, A.J. An electrophysiological investigation of limb-girdle and facioscapulohumeral dystrophy. J. Neurol. Neurosurg. Psychiat. 1971, 34: 469-474.

Silverman, L.M., Mendell, J.R., Sahenk, Z., Fontana, M.B. Significance of creatine phosphokinase isoenzymes in Duchenne dystrophy. Neurology (Minneap.) 1976, 26: 561-564.

Sjövall, B. Dystrophia musculorum progressiva. Acta Psychiat. Neurol. 1936, suppl. 10.

Spalke, G., Hökendorf, H., van Roques, P. Zur Differentialdiagnose der scapuloperonealen Amyotrophie. J. Neurol. 1976, 212: 253-269.

Spencer Jr., G.E. Orthopaedic care of progressive muscular dystrophy. J. Bone Jt. Surg. 1967, 49A: 1201-1204.

Spiro, A.J., Prineas, J.W., Moore, C.L. A new mitochondrial myopathy in a patient with salt-craving. Arch. Neurol (Chic.)

1970, 22: 259-269.

Steidl, L., Urbánek, K. Scapuloperoneal syndrome as a manifestation of progressive muscular dystrophy. Proceeding of the 2nd Conference on Myopathies at Janské Lázne (CSSR) 1971, pp. 67-77.

Stevenson, A.C., Muscular dystrophy in Northern Ireland. I. An account of 51 families. Ann. Eugen. 1953, 18: 50-93.

Stevenson, A.C. Muscular dystrophy in Northern Ireland, II. An account of nine additional families. Ann. Hum. Genet. 1955, 19: 159-164.

Stevenson, A.C., Cheeseman, E.A., Huth, M.C. Muscular dystrophy in Northern Ireland. III. Linkage data with particular reference to autosomal limb-girdle muscular dystrophy. Ann. Hum. Genet. 1955, 19: 165-173.

Takahashi, K., Nakamura, H., Tanaka, K., Mutsumura, T. Neurogenic scapuloperoneal amyotrophy associated with dystrophic changes. Clin. Neurol. (Tokyo), 1971, 11: 650-658.

Takahashi, K., Nakamura, H., Nakashima, R. Scapuloperoneal dystrophy associated with neurogenic changes. J. Neurol. Sci. 1974, 23: 575-583.

Telerman-Toppet, N., Gerard, J.M., Coërs, C. Central core disease. J. Neurol. Sci. 1973, 19: 207-223.

Thomas, P.K., Calne, D.B., Elliott, C.F. X-linked scapuloperoneal syndrome. J. Neurol. Neurosurg. Psychiat. 1972, 35: 208-215.

Thomas, P.K., Schott, G.D., Morgan-Hughes, J.A. Adult onset scapuloperoneal myopathy. J. Neurol. Neurosurg. Psychiat. 1975, 38: 1008-1015.

Tohghi, H., Tsukagoshi, H., Toyokura, Y. Neurogenic scapuloperoneal syndrome with autosomal recessive inheritance. Clin. Neurol. (Tokyo) 1971, 11: 215-220.

Tsukagoshi, H., Nakanishi, T., Kondo, K., Tsubaki, T. Hereditary proximal neurogenic muscular atrophy in adults. Arch. Neurol. (Chic.) 1965, 12: 597-603.

Tsukagoshi, H., Takasu, T., Yoshida, M., Toyokura, Y. A family with scapuloperoneal muscular atrophy. Clin. Neurol. (Tokyo) 1969, 9: 511-517.

Tyler, F.H., Stephens, F.E. Studies in disorders of muscle: II: clinical manifestations and inheritance of facioscapulohumeral dystrophy in a large family. Ann. Int. Med. 1950, 32: 640-660.

Van Wijngaarden, G.K., Bethlem, J., Meijer, A.E.F.H., Hülsman, W.C., Feltkamp, C.A. Skeletal muscle disease with abnormal mitochondria. Brain 1967, 90: 577-592.

Van Wijngaarden, G.K., Fleury, P., Bethlem, J., Meijer, A.E.F.H. Familial "myotubular" myopathy. Neurology (Minneap.) 1969, 19: 901-908.

Van Wijngaarden, G.K., Bethlem, J. The facioscapulohumeral syndrome. Internat. Congress Series No. 295. Clinical Studies in Myology. Ed: B.A. Kakulas. Excerpta Medica, Amsterdam, 1973 pp. 498-501.

Van Wijngaarden, G.K., Bethlem, J. Benign infantile spinal muscular atrophy. A prospective study. Brain 1973, 96: 163-170.

Vignos Jr., P.J., Watkins, M.P. The effects of exercise in muscular dystrophy. J.A.M.A. 1966, 197: 843-848.

Vignos Jr., P.J. Diagnosis of progressive muscular dystrophy. J. Bone Jt. Surg. 1967, 49A: 1212-1220.

Vignos Jr., P.J. Rehabilitation in the myopathies. In: Handbook of Clinical Neurology. Eds: Vinken, P.J. and Bruyn, G.W. vol. 41, chapter 13. North-Holland Publishing Company, 1979.

Walton, J.N., Nattrass, F.J. On the classification, natural history and treatment of the myopathies. Brain 1954, 77: 169-231.

Walton, J.N. On the inheritance of muscular dystrophy. Ann. Hum. Genet. 1955, 20: 1-13.

Walton, J.N. The inheritance of muscular dystrophy: further observations. Ann. Hum. Genet. 1956, 21: 40-58.

Walton, J.N., Adams, R.D. Polymyositis. Livingstone Ltd., Edinburgh, 1958.

Walton, J.N., Gardner-Medwin, D. Progressive muscular dystrophy and the myotonic disorders. In : Disorders of Voluntary Muscle. Fourth edition. Ed: Sir John Walton, Churchill-Livingstone, London, 1981.

Waters, D.D., Nutter, D.O., Hopkins, L.C., Dorney, E.R. Cardiac features of an unusual X-linked humeroperoneal neuromuscular disease. N.E.J.M. 1975, 293: 1017-1022.

Weisenfeld, S., Messinger, W.J. Cardiac involvement in progressive muscular dystrophy. Amer. Heart J. 1952, 43: 170-187.

Weitz, W. Über die Vererbung bei der Muskeldystrophie. Dtsch. Z. Nervenheilk. 1921, 72: 143-204.

Welch, K.M.A., Goldberg, D.M. Serum creatine phosphokinase in motor unit disease. Neurology (Minneap.) 1972, 22: 697-701.

Welsh, J.D., Lynn, T.N., Haase, A.R. Cardiac findings in 73 patients with muscular dystrophy. Arch. Int. Med. 1963, 112: 199-

206.

Williams, E.R., Bruford, A. Creatine phosphokinase in motor unit disease. Clinica Chimica Acta 1970, 27: 53-56.

Winkler, C., van de Weijde, A.J. N.T.V.G. 1889, 3: 69-87.

Wintzen, A.R. Personal communication, 1979.

Wohlfart, G., Fex, J., Eliasson, S. Hereditary proximal spinal muscular atrophy. A clinical entity simulating progressive muscular dystrophy. Acta Psychiat. Neurol. Scand. 1955, 30: 395-406.

Worsfold, M., Park, D.C., Pennington, R.J.T. Familial "mitochondrial" myopathy. A myopathy associated with disordered oxidative metabolism in muscle fibre. Part 2: Biochemical findings. J. Neurol. Sci. 1973, 19:261-274.

Zatz, M., Shpiro,L.J., Campion, D.S., Oda, E., Kaback, M.M. Serum pyruvate kinase (PK) and creatine phosphokinase (CPK) in progressive muscular dystrophies. J. Neurol. Sci. 1978, 36: 349-362.

Zweig, M.H., Adornato, B., van Steirteghem, A.C., Engel, W.K. Serum Creatine Kinase, BB and MM concentrations, determined by radioimmunoassay in neuromuscular disorders. Ann. Neurol. 1980, 7: 324-328.

STELLINGEN

behorende bij het proefschrift Facioscapulohumeral Disease

1. Hoewel facioscapulohumerale ziekte waarschijnlijk de meest frequente neuromusculaire aandoening in Nederland is, ziet de clinicus slechts het topje van de ijsberg.

2. De extreme lumbale hyperlordose, die bij patiënten met facioscapulohumerale ziekte kan voorkomen, is voornamelijk een gevolg van de uitgesproken parese van de buikspieren.

3. De bevindingen bij de spierbiopsieën van patiënten met facioscapulohumerale ziekte zijn niet kenmerkend voor deze ziekte en extreem variabel in aard en intensiteit.

4. Aangezien het syndroom van Davidenkow nooit meer is waargenomen zoals het oorspronkelijk beschreven werd, heeft het geen bestaansrecht als een zelfstandige aandoening.

5. Vanwege de voordelen voor patiënt en onderzoeker verdient de percutane naaldbiopsie de voorkeur boven een open spierbiopsie bij de diagnostiek van neuromusculaire ziekten.

6. Bij verdenking op een compressio medullae op thoracaal niveau verdient laterale cervicale of suboccipitale contrasttoediening de voorkeur.

7. Er is geen indicatie voor een acuut operatief ingrijpen bij een reeds bestaande parese op basis van een lumbale hernia nucleï pulposi.

8. Glucocorticoïden bij de behandeling van hersenoedeem ten gevolge van trauma, hypoxie, ischaemie en infectie zijn vooralsnog alleen gerechtvaardigd in het kader van studies naar hun effect.

9. Een CT-scan van de hersenen, gemaakt voor het aantonen of uitsluiten van hersenmetastasen, kan niet optimaal beoordeeld worden zonder klinische gegevens en de patient, bij wie zo'n scan gemaakt wordt, kan niet optimaal behandeld worden zonder

dat hij neurologisch onderzocht is.

10. Aangezien de EEG afwijkingen bij een hepatische encephalopathie niet specifiek zijn en in beperkte mate correleren met het niveau van het bewustzijn heeft het maken van EEG's voor de behandeling van deze aandoening geen zin.

11. Bij het onttrekken van neuroleptische medicatie bij zwakzinnigen moet rekening gehouden worden met de mogelijkheid dat het ontstaan van gedragsstoornissen het gevolg kan zijn van de onttrekking zelf.

12. Het geven van narcose bij kinderen voor een paracentese bij een otitis media is niet gerechtvaardigd vanwege de risico's van de narcose en de mogelijkheid van goede andere behandelingswijzen.

13. Strasser's kritiek op Levinas' eschatologische visie in "Totalité et Infini" berust op een misverstand. Ten onrechte interpreteert Strasser "la convergence entre la moralité et la réalité" als een te verwachten maatschappelijke ontwikkeling; het betreft hier echter een aanduiding van de menselijke subjectiviteit.

Strasser, S.: Jenseits von Sein und Zeit.

G. Padberg

Leiden, 13 oktober 1982