Universiteit Leiden
The Netherlands

HNPCC, molecular and clinical dilemmas

Wagner, A.

Citation
Wagner, A. (2005, April 27). *HNPCC, molecular and clinical dilemmas*. Macula, Boskoop. Retrieved from https://hdl.handle.net/1887/2719

Version:	Corrected Publisher's Version
License:	Licence agreement concerning inclusion of doctoral thesis in the Institutional Repository of the University of Leiden
Downloaded from:	https://hdl.handle.net/1887/2719

Note: To cite this publication please use the final published version (if applicable).

3.1.

Atypical HNPCC owing to *MSH6* germline mutations; analysis of a large Dutch pedigree

J Med Genet 2001:38;318-322

Short report

Atypical HNPCC owing to *MSH6* germline mutations: analysis of a large Dutch pedigree

A Wagner, Y Hendriks, E J Meijers-Heijboer, W J F de Leeuw, H Morreau, R Hofstra, C Tops, E Bik, A H J T Bröcker-Vriends, C van der Meer, D Lindhout, H F A V asen, M H Breuning, C J Cornelisse, C van Krimpen, M F Niermeijer, A H Zwinderman, J Wijnen, R Fodde

Department of Clinical Genetics, Erasmus University Rotterdam, The Netherlands
A Wagner
E J Meijers-Heijboer
C van der Meer
D Lindhout
M F Niermeijer

Department of Human and Clinical Genetics, Leiden University Medical Centre, Wassenaarseweg 72, 2333 AL Leiden, The Netherlands
A Wagner
Y Hendriks
C Tops
E Bik
A H J T Bröcker-Vriends
M H Breuning
A H Zwinderman
J Wijnen
R Fodde

Department of Pathology, Leiden University Medical Centre, The Netherlands
W J F de Leeuw
H Morreau
C J Cornelisse

Department of Medical Genetics, University Hospital Groningen, The Netherlands
R Hofstra

Department of Medical Genetics, University Medical Centre Utrecht, The Netherlands
D Lindhout

The Netherlands Foundation for the Detection of Hereditary Tumours, The Netherlands
H F A V asen

Department of Pathology, Reinier de Graaf Gasthuis/SSDZ, Delft, The Netherlands
C van Krimpen

Correspondence to: Dr R Fodde, R.Fodde@LUMC.nl

Revised version received 25 January 2001
Accepted for publication 15 February 2001

Abstract

Hereditary non-polyposis colorectal cancer (HNPCC) is the most common genetic susceptibility syndrome for colorectal cancer. HNPCC is most frequently caused by germline mutations in the DNA mismatch repair (MMR) genes *MSH2* and *MLH1*. Recently, mutations in another MMR gene, *MSH6* (also known as *GTBP*), have also been shown to result in HNPCC. Preliminary data indicate that the phenotype related to *MSH6* mutations may differ from the classical HNPCC caused by defects in *MSH2* and *MLH1*.

Here, we describe an extended Dutch HNPCC family not fulfilling the Amsterdam criteria II and resulting from a *MSH6* mutation. Overall, the penetrance of colorectal cancer appears to be significantly decreased ($p<0.001$) among the *MSH6* mutation carriers in this family when compared with *MSH2* and *MLH1* carriers (32% by the age of 80 *v* >80%).

Endometrial cancer is a frequent manifestation among female carriers (six out of 13 malignant tumours). Transitional cell carcinoma of the urinary tract is also relatively common in both male and female carriers (10% of the carriers).

Moreover, the mean age of onset of both colorectal cancer (*MSH6 v MSH2/MLH1* = 55 years *v* 44/41 years) and endometrial carcinomas (*MSH6 v MSH2/MLH1* = 55 years *v* 49/48 years) is delayed. As previously reported, we confirm that the pattern of microsatellite instability, in combination with immunohistochemical analysis, can predict the presence of a *MSH6* germline defect.

The detailed characterisation of the clinical phenotype of this kindred contributes to the establishment of genotype-phenotype correlations in HNPCC owing to mutations in specific mismatch repair genes.

(*J Med Genet* 2001;**38**:318–322)

Keywords: hereditary non-polyposis colorectal cancer; *MSH6*

Hereditary non-polyposis colorectal cancer (HNPCC) is one of the most common autosomal dominant conditions predisposing to cancer. HNPCC carriers are at risk for the development of a broad spectrum of malignancies including tumours of the colon, endometrium, stomach, small intestine, hepatobiliary system, ureter, renal pelvis, and ovary.[1] HNPCC is caused by germline mutations in DNA mismatch repair (MMR) genes, predominantly *MSH2* on chromosome 2p16[2] and *MLH1* on chromosome 3p21.[3] In a minority of cases, mutations have been described in other MMR genes like *PMS1* and *PMS2*.[4] Recently, germline mutations in the *MSH6* gene on chromosome 2p15 were recognised as a frequent cause of atypical HNPCC, that is, not complying with the clinical "Amsterdam criteria".[5–9]

The involvement of MMR genes in HNPCC is reflected by the occurrence of instability of simple repetitive DNA sequences (microsatellite instability or MSI) in tumours from HNPCC patients. Accordingly, more than 90% of the colorectal tumours and at least 75% of the endometrial tumours from HNPCC patients display MSI.[10–12] Sporadic colorectal and endometrial cancer, MSI is found in about 15-30% of tumours.[13 14]

The first reports on *MSH6* germline mutations have indicated that the clinical phenotype of the affected families may differ from the "classical" HNPCC caused by *MSH2* and *MLH1* mutations.[5–9] The penetrance of colorectal cancer seemed to be reduced. However, endometrial cancer was likely to represent a more important clinical manifestation among female *MSH6* carriers. The reported mean age of onset of colorectal and endometrial cancer appeared to be delayed in families with *MSH6* germline mutations, 50 years and older compared to 44 (*MSH2*) and 41 (*MLH1*) years of age[15] and 53 years and older compared to 49 (*MSH2*) and 48 (*MLH1*) years, respectively.[7] Notably, MSI analysis of tumours from *MSH6* mutation carriers suggested a reduced penetrance of the MSI-H phenotype and preferential instability at mononucleotide repeats.[7–9 12]

Here, we report the clinical and molecular characterisation of a large HNPCC kindred

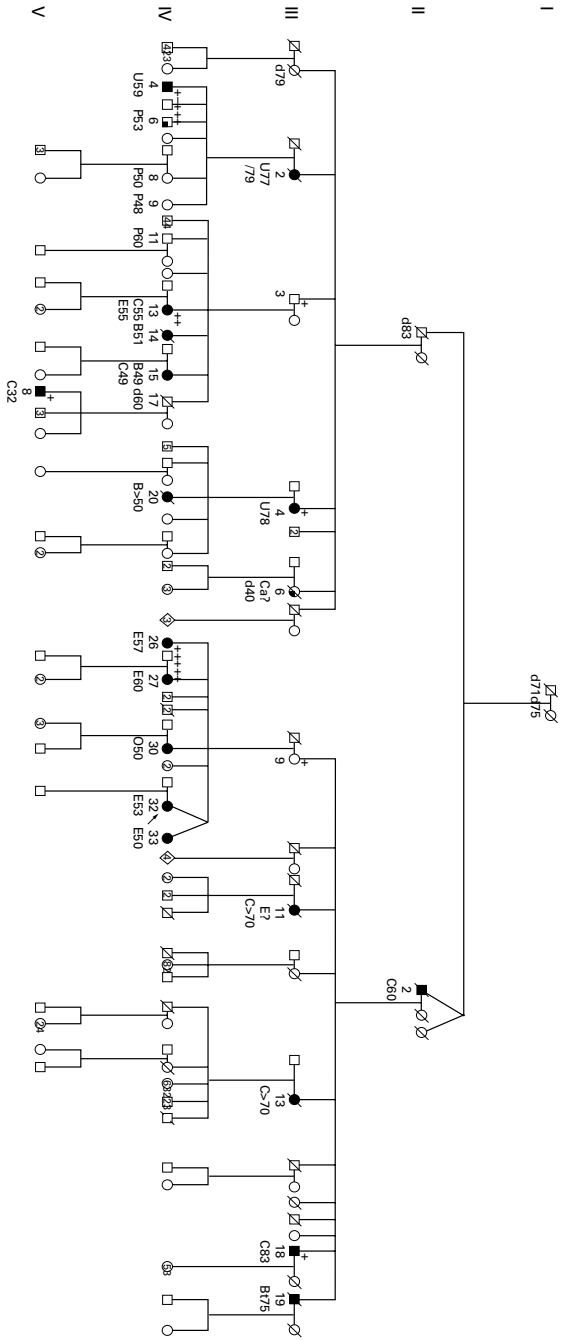

Figure1PedigreeofMSH6family.C=colorectalcancer.E=endometrialcancer. U=urinarytractcancer.P=polyp.O=ovariancancer.B=breastcancer.Bt=brain tumour.Ca?=cancerofunknownorigin.+=MSH6mutationpositive. – =MSH6 mutationnegative.

resultingfromaframeshiftmutationinthe *MSH6* gene.

Patients

Theproband,a50yearoldfemale,wasreferred totheDepartmentofClinicalGenetics, Rotterdambyhergynaecologistin1993.At thattime,threeofhersixsisterswere diagnosedwithendometrialcancerat50,57, and60yearsofage.Afourthsisterhaddeveloped ovariancancer(endometroidadenocarcinoma)attheageof50.Theproband'sfather diedattheageof85withoutanysymptomsof HNPCC.Hermotherunderwentahysterectomyforleiomyomataat55andwasingood healthat92yearsofage.

Thedifferentialdiagnosisinthisfamily includedHNPCC.Mutationanalysisofthe *MLH1* and *MSH2* genesbyPCRandDGGE inoneofthea ffectedsistersoftheprobanddid notshowanypathogenicmutation.Inthe meantime,theprobanddevelopedendometrial cancerattheageof53,thefourthcaseof endometrialcancerinthissibship.

Assoonas *MSH6* mutationanalysisbecame available,mutationscreeningwasperformed andaframeshiftmutation(delTcodon594)in exon4wasidentified.[7] Theproband,her affectedsisters,andmotherwerefoundto carrythesamemutation.

Attherequestoftheproband,familymemberswereinformedaboutthefindingsand wereinvitedtocontactthe Department of ClinicalGeneticsforadditionalinformation and/ortobetestedforthepresenceofthe mutation.

Wewerealsoabletolinkthefamilyto anotherkindredunderinvestigationatthe DepartmentofClinicalGeneticsattheLeiden UniversityMedicalCentre.

Mutationanalysis

Intotal,DNAtestingforthe *MSH6* mutation wasperformedin80outof132livingrelatives withatleasta25%riskofbeingcarrierofthe *MSH6* mutation(fig1),27males(outof63, 43%)and53females(outof69,77%).Outof these132relatives,11werepreviouslydiagnosedwithanHNPCCrelatedtumourandall ofthemweretested.Twotestedunaffected relativeswereobligatecarriers.Outof75carriersat50%riskand44at25%risk,46(61%) and21(48%)weretested,respectively(tables 1and2).

Tenofthe11affectedsubjectswerecarriers ofthefamilial *MSH6* mutation.Thepatient (IV.6)negativeforthemutationwasa55year oldmale,diagnosedwithnumeroustubulovillousadenomasattheageof53.Sincehisclinicalpresentationwassuggestiveoffamilial adenomatouspolyposis(FAP),thoughwitha delayedageofonset,mutationanalysisofthe *APC* genewasperformed.Thisdidnotshow anyalteration.

The *MSH6* mutationwasconfirmedinboth unaffectedobligatecarriers.

Outofthe46testedhealthysubjectswitha 50%riskforthemutation,17(37%)were foundtocarrythe *MSH6* mutation;noneof thosewitha25%risktestedpositive(table2).

All17unaffectedmutationcarriersabovethe ageof25years(fivemalesand12females)were offeredthegenerallyacceptedsurveillancefor HNPCC,namelycolonoscopyeveryonetotwo years,yearlygynaecologicalexaminationwith vaginalultrasoundandCA125bloodtesting

Table1(Pre)malignanttumoursintheextendedDutchMSH6family

PatientTumour	*Ageat diagnosisMSH6mutation*
II.2Colorectalcancer	60Obligatecarrier
III.2Transitionalcellcarcinomarightpyelum77Obligatecarrier &transitionalcellcarcinomaleftureter79	
III.4Transitionalcellcarcinoma	78+
III.6Unknown	40Nottested
III.11Endometrialcarcinoma	?Obligatecarrier
Coloncarcinoma	>70
III.13Coloncarcinoma	>70Nottested
III.18Coloncarcinoma	83+
III.19Astrocytoma	75Nottested
IV.4Transitionalcellcarcinomaureter	59+
IV.6Multipleadenomatouspolypsofthecolon53−	
IV.8Adenoma	50+
IV.9Adenoma	48+
IV.11Tubulovillousadenoma	60+
IV.13Endometrial&rectalcarcinoma	55+
IV.14Breastcancer	51Nottested
IV.15Breast&coloncarcinoma	49+
IV.20Breastcancer	>50Nottested
IV.26Endometrialcarcinoma	57+
IV.27Endometrialcarcinoma	60+
IV.30Endometroidadenocarcinomaovary	50+
IV.32Endometrialcarcinoma	53+
IV.33Endometrialcarcinoma	50+
V.8Colorectalcancer	32+

+indicatesthepresenceofthe *MSH6* mutation.
– indicatestheabsenceofthe *MSH6* mutation.

Table2Resultsofmutationanalysis

	Male	*Female*	*Total*
Pretestrisk100%*50%25%100%*50%25%			
Tested	5157	8311480	
MSH6+	440	813029	
MSH6−	1117	0181451	
Nottested01917		010652	
Total	53424	84120132	

*RelativeswithanHNPCCrelatedtumourandobligatecarriers.

(forfemalecarriers),andyearlyurinesediment testingandcytology.Duringthefirstscreening thefollowingdiagnoseswerемade:atubulovillousadenomawithdysplasiaintheproximal rectumofa60yearoldmale;aninvasiveductal adenocarcinomaofthebreastandanadenocarcinomaofthecolonina49yearoldfemale;a smalltubularadenomaandendometrialhyperplasiaina50yearoldfemale;andanadenoma inafemaleaged48.Oftheremaining13 carriers,fourwereundertheageof45andfour wereabove70yearswithoutanysymptomsof thegeneticpredisposition.However,a92year oldfemaleunderwentahysterectomybecause ofleiomyomataoftheuterusattheageof55.

Thefamilyincludedfivedeadobligate mutationcarriers,threefemalesandtwomales. Threeofthemhadbeendiagnosedwitha HNPCCrelatedtumour(table1).Onemale reachedtheageof83withouthavingdeveloped anyHNPCCrelatedtumour.

Wewerenotabletodetermine the *MSH6* statusoffivecancerpatientsinthisfamily:one colorectalcancer(onset>70)inafemale patient(III.13)whose13descendantstested negativeforthemutation;onemalewithan astrocytoma(III.19)attheageof75,threeof whosefourchildrendidnotcarrythemutation;twobreastcancerpatients(IV.14,IV.20, onset>50);andonepatientwithcancerof unknownoriginaroundtheageof40(III.6).

Intotal,34mutationcarriers(29aliveand fivedead)wereidentifiedinthispedigree,17of whomdevelopeda(pre)malignanttumour (table1).Ofthecarrierswithamalignancy, fourhadtwoprimaryHNPCCrelatedtumours.UsingtheKaplan-Meyermethod,7% ofthecarriersdevelopedcolorectalcancerby theageof50yearsand32%bytheageof80 years(meanageofonset55years,rangingfrom 32to83years).Ofthefemalecarriers,52% developedendometrialcancerbytheageof80 andallofthemwerediagnosedabovetheageof 50years.Threecarriershadapapillarytransitionalcellcarcinomaoftheurinarytract(10% ofthecarriers).

Microsatelliteinstability(MSI)and immunohistochemical(IHC)analyses

WeperformedMSIanalysisand/orimmunohistochemistrywithantibodiesagainstMLH1, MSH2,andMSH6 [12] ontumoursamples derivedfrom12subjects;infourcases,two independenttumoursampleswerетested (table3).

UsingthemarkersrecommendedbyBoland *etal* ,[16] MSIanalysisshowedvariablepatterns (table3).However,alltumoursamplesderived fromthe *MSH6* carriersdisplayedinstabilityof atleastonemononucleotidemarkerwhenan extendedsetofmarkers,includingBAT40,was used.

Immunohistochemical(IHC)analysisofthe MSH6proteinintumoursectionsshowedno expressioninanyofthesamplestested,with

Table3Microsatelliteandimmunohistochemicalanalysisintumoursfrom12a ffectedrelatives

	Subject					
	III.2	*III.4*	*III.13*	*III.18*	*IV.4*	*IV.6*	*IV.13*	*IV.15*	*IV.26*	*IV.27*	*IV.30*	*IV.32*
Tumourtype	U	U	U	C	C	U	P	R	E	E	O	E
MicrosatellitestatusH	H	L	N	T	H	H	L	S	H	L	S	H
Mononucleotidemarkers												
BAT25*	+	+	+	N	T	+	+	−	−	+	+	−
BAT26*	N	T	+	−	N	T	+	+	+	−	+	−
BAT40	+	+	+	N	T	+	+	+	+	−	+	−
Dinucleotidemarkers												
D2S123*	+	N	T	−	N	T	−	−	−	−	−	−
D5S346*	−	+	−	N	T	+	−	−	−	+	−	−
D17S250*	+	N	T	−	N	T	+	−	−	−	−	−
Immunohistochemistry												
MLH1	N	T	N	T	+	+	+	+	+	+	+	+
MSH2	N	T	N	T	+	+	+	+	+	+	+	+
MSH6	N	T	N	T	−	+	−	−	N	T	+	−

*=markersrecommendedbyNCIforMSIanalysis. [16] +=Unstable.−=Stable.NT=nottested/notconclusive.H=MSIhighaccordingtoNCIrecommendations.[16] L=MSIlowaccordingtoNCIrecommendations. [16] S=MSIstableaccordingtoNCIrecommendations. [16] C=colontumour.U=urinarytracttumour. E=endometrialtumour.O=ovariantumour.R=rectaltumour.P=polyp.B=breasttumour. Immunohistochemistry:+++=strongstaining,++=moderatestaining,+=weakstaining,−=nostaining.

theexceptionofIII.13andIV.6.PatientIII.13 couldnotbetestedforeitherthepresenceof thegermlinemutationorforMSI,andislikely torepresentaphenocopy,inviewofthelate ageofonset(coloncarcinomaat>70years) andthefailuretodetectthe *MSH6* mutation inher13descendants.Wewereableto performMSIanalysisinasingleadenoma frompatientIV.6thatdidnotdisplay instabilityforanyofthetestedmarkers. MLH1andMSH2IHCanalysiswaspositive inallsampleswiththeexceptionofthe rectalcarcinomafromIV.13,negativefor MSH2.

Discussion

Geneticheterogeneityandvariablephenotypic expressionrepresentmajorcomplicationsin thediagnosisandclinicalmanagementof HNPCC,oneofthemostcommoninherited predispositionstomultiorgantumorigenesis. Althoughthehallmarkofthisconditionisrepresentedbycolorectallesions,abroadrangeof cancertypes,includingtumoursoftheendometrium,stomach,smallintestine,hepatobiliarysystem,andureter,areestablishedclinicalexpressionsofHNPCC.Thevastmajority ofHNPCCcasesareknowntoresultfrom germlinemutationsintheDNAmismatch repairgenes *MSH2* and *MLH1*.[17] Inthesekindreds,highpenetranceandearlyonsetof colorectalandendometrialcancerarethe majorclinicalfeatures.Thesetofdiagnostic criteria,AmsterdamcriteriaIandII,established bytheInternationalCollaborative GrouponHNPCC [18,19] wellservethepurpose ofselectingfamilieswithahighlikelihoodof carrying *MSH2* and *MLH1* mutations.[17] More recently,atypicalHNPCCfamilies,thatis,not complyingwiththeAmsterdamcriteria(ACI andII)thoughclearlysuggestiveofaHNPCC-likeinheritedcondition,havebeenreportedto becausedbygermlinemutationsinathird MMRgene,namely *MSH6*.[7–9] Preliminary phenotypicanalysisofthesefamiliesshoweda reducedoccurrenceofcolorectalcanceranda prevalenceofendometrialtumours.

Here,wehavepresentedadetailedanalysis ofanextendedDutchHNPCCpedigree resultingfromaninactivatinggermlinemutationofthe *MSH6* gene.

Theexpressionofthe *MSH6* mutationin thisfamilysuggestsareducedpenetranceanda delayedageofonsetforcolorectalcancer. UsingtheKaplan-Meyermethod,7%ofthe carriersdevelopedcolorectalcancerbytheage of50yearsand32%bytheageof80years. Thisissignificantlyreduced($p<0.001$)comparedto"classical"HNPCCcausedby *MSH2* and *MLH1* (~55%byage50and>80%byage 80).[15] Admittedly,thesecalculationsarebased onalimitednumberofcasesandmay representanoverestimatebecausenotall healthyeligiblerelativesweretestedforthe *MSH6* mutation.Moreover,theselectionbias introducedwhenstudyingafamilywithsucha strikingclinicalhistorymayalsoleadtoan overestimationofthepenetrance.Themean ageofonsetofthecolorectalcarcinomasinthis familyis55years.Thisisdelayedwhen comparedwithHNPCCfamiliescausedby *MSH2* (44years)and *MLH1* (41years)mutations.[15] Thisdelayedageofonsetmayalsobias theestimatedpenetrance.Notably,theyoungestdiagnosedcasewasat32years,implying thatperiodicscreeningrecommendations shouldnotdifferfromthoseestablishedfor classicalHNPCCuntilmoredataareavailable.

Inthisfamily,endometrialcanceristhemost commontumourtype(sixoutof13malignant tumours)amongfemalecarriers.Allthe endometrialcancerswerediagnosedabovethe ageof50andtheirmeanageofonsetwas55 years,thatis,fiveto10yearslaterwhen comparedwith"classical"HNPCCcausedby mutationsin *MLH1* and *MSH2*.[7,20]

Anotherstrikingclinicalphenotypeinthis familyisthepapillarytransitionalcellcarcinomaoftheureterandrenalpelvisobservedin threerelatives(10%ofthecarriers).Notably, thelifetimecumulativeriskofthistumourtype in *MLH1* or *MSH2* mutationcarriersisonly 2.6%.[21]

Aspreviouslyreportedbyusandothers,[7–9] theMSIphenotypecausedbylossof *MSH6* functionisreducedwhencomparedwith *MLH1* and *MSH2*,anddifferinitspredominanceatmononucleotideruns.Thisisin agreementwithpreviousstudiesonyeastand mousemodelsystems.[22,23] Fromthispointof view,thesetofmarkerspreviouslyrecommendedbyNCIforMSIanalysis[16] maynotbe suitablefor *MSH6* mutationcarriersand shouldbecomplementedwithasetof mononucleotidemarkers.Insixofthecases reportedhere(III.4,IV.4U,IV.13E,IV.15C, IV.27,andIV.32)(table3),instabilitywas observedatonlyoneortwomononucleotide repeats(oneofwhichwasnotincludedinthe NCIpanel)leadingtoanMSI-loworstable classification.Infiveofthesecases,IHCwas performedandindicatedthelossofMSH6in thetumour.Therefore,werecommendIHC analysisinMSI-LandMSStumoursfrom caseswithafamilyhistorysuggestiveof HNPCC.[12]

WealsoshowthefeasibilityoftheIHC approachnotonlyoncolorectaltumoursbut alsoincarcinomaoftheendometrium,urinary tract,andbreast.Thelatterfindingisrelevant fortheinclusionofbreastcancerinthe HNPCCtumourspectrum:breasttumour samplesfromIV.15showedbothMSI-highand anegativeIHCstainingpatterninaccordance withthepresenceofthe *MSH6* germline mutationinthisperson.Twoadditional perimenopausalbreastcancercaseswerefound inthepresentstudy(IV.14andIV.20). However,asnomaterialwasavailablefrom thesepatients,wecouldnotestablishtheir *MSH6* mutationcarrierstatus.

IHCanalysiswasalsohelpfulinthe assessmentofthelikelyphenocopystatusrelativetoIII.13.Asalimitedamountofacolorectalcarcinomawasavailablefromthisdead patient,welimitedouranalysistoIHCand foundnormalMSH6proteinexpression. Moreover,allherdescendantstestednegative forthemutation.Anotherdeadpatientfrom

this family, III.19, was diagnosed with astrocytoma at the age of 75. Again, no archival material was available from this patient. However, the delay edage of onset and the fact that three of his children tested negative for the mutation, do not allow us to draw any conclusion on the relationship between the presence of the brain tumour and the *MSH6* defect.

Patient IV.6 presented with a clinical phenotype more suggestive of attenuated polyposis[24] rather than HNPCC. Accordingly, MSI analysis of the colonic polyps was negative (MSS) and normal MSH6 expression was found by IHC. Failure to detect the *MSH6* mutation in this patient confirmed that the attenuated polyposis is likely to result from an unlinked genetic predisposition.

In conclusion, the clinical features associated with *MSH6* germline mutations strongly support the inclusion of endometrial cancer and transitional cell cancer of the ureter and renal pelvis in the diagnostic criteria for HNPCC in the new Amsterdam Criteria (ACII) as formulated by the ICG-HNPCC.[19] In addition, we propose to perform MSI in combination with IHC in all Amsterdam negative families with a clustering of endometrial or urinary tract cancers. The combined MSI and IHC analysis will direct subsequent mutation analysis for *MSH6*.

We thank Dr JJ PMP ieters, gynaecologist, for referring the family to the Department of Clinical Genetics, Rotterdam.

1 Lynch HT, de la Chapelle A. Genetic susceptibility to non-polyposis colorectal cancer. *J Med Genet* 1999; **36**: 801-18.
2 Fishel R, Lescoe MK, Rao MR, Copeland NG, Jenkins NA, Garber J, Kane M, Kolodner R. The human mutator gene homolog MSH2 and its association with hereditary nonpolyposis colon cancer. *Cell* 1993; **75**: 1027-38.
3 Bronner CE, Baker SM, Morrison PT, Warren G, Smith LG, Lescoe MK, Kane M, Earabino C, Lipford J, Lindblom A, Tannergård P, Bollag RJ, Godwin AR, Ward DC, Nordenskjøld M, Fishel R, Kolodner R, Liskay RM. Mutation in the DNA mismatch repair gene homologue hMLH1 is associated with hereditary non-polyposis colon cancer. *Nature* 1994; **368**: 258-61.
4 Nicolaides NC, Papadopoulos N, Liu B, Wei YF, Carter KC, Ruben SM, Rosen CA, Haseltine WA, Fleischmann RD, Fraser CM, Adams MD, Venter JC, Malcolm GD, Hamilton SR, Petersen GM, Chapelle de la A, Vogelstein B, Kinzler KW. Mutations of two PMS homologues in hereditary nonpolyposis colon cancer. *Nature* 1994; **371**: 75-80.
5 Akiyama Y, Sato H, Yamada T, Nagasaki H, Tsuchiya A, Abe R, Yuasa Y. Germ-line mutation of the MSH6/GTBP gene in an atypical hereditary nonpolyposis colorectal cancer kindred. *Cancer Res* 1997; **57**: 3920-3.
6 Miyaki M, Konishi M, Tanaka K, Kikuchi-Yanoshita R, Muraoka M, Yasuno M, Igari T, Koike M, Chiba M, Mori T. Germline mutation of MSH6 as the cause of hereditary nonpolyposis colorectal cancer. *Nat Genet* 1997; **17**: 271-2.
7 Wijnen J, de Leeuw W, Vasen H, van der Klift H, Moller P, Stormorken A, Meijers-Heijboer H, Lindhout D, Menko F, Vossen S, Moslein G, Tops C, Brocker-Vriends A, Wu Y, Hofstra R, Sijmons R, Cornelisse C, Morreau H, Fodde R. Familial endometrial cancer in female carriers of MSH6 germline mutations. *Nat Genet* 1999; **23**: 142-4.
8 Wu Y, Berends MJ, Mensink RG, Kempinga C, Sijmons RH, van Der Zee AG, Hollema H, Kleibeuker JH, Buys CH, Hofstra RM. Association of hereditary nonpolyposis colorectal cancer-related tumors displaying low microsatellite instability with MSH6 germline mutations. *Am J Hum Genet* 1999; **65**: 1291-8.
9 Kolodner RD, Tytell JD, Schmeits JL, Kane MF, Gupta RD, Weger J, Wahlberg S, Fox EA, Peel D, Ziogas A, Garber JE, Syngal S, Anton-Culver H, Li FP. Germ-line msh6 mutations in colorectal cancer families. *Cancer Res* 1999; **59**: 5068-74.
10 Fujiwara T, Stolker JM, Watanabe T, Rashid A, Longo P, Eshleman JR, Booker S, Lynch HT, Jass JR, Green JS, Kim H, Jen J, Vogelstein B, Hamilton SR. Accumulated clonal genetic alterations in familial and sporadic colorectal carcinomas with widespread instability in microsatellite sequences. *Am J Pathol* 1998; **153**: 1063-78.
11 Ichikawa Y, Lemon SJ, Wang S, Franklin B, Watson P, Knezetic JA, Bewtra C, Lynch HT. Microsatellite instability and expression of MLH1 and MSH2 in normal and malignant endometrial and ovarian epithelium in hereditary nonpolyposis colorectal cancer family members. *Cancer Genet Cytogenet* 1999; **112**: 2-8.
12 de Leeuw WJ, Dierssen J, Vasen HF, Wijnen JT, Kenter GG, Meijers-Heijboer H, Brocker-Vriends A, Stormorken A, Moller P, Menko F, Cornelisse CJ, Morreau H. Prediction of a mismatch repair gene defect by microsatellite instability and immunohistochemical analysis in endometrial tumours from HNPCC patients. *J Pathol* 2000; **192**: 328-35.
13 Ionov Y, Peinado MA, Malkhosyan S, Shibata D, Perucho M. Ubiquitous somatic mutations in simple repeated sequences revealan ew mechanism for colonic carcinogenesis. *Nature* 1993; **363**: 558-61.
14 Helland A, Borresen-Dale AL, Peltomaki P, Hektoen M, Kristensen GB, Neslandj JM, dela Chapelle A, Lothe RA. Microsatellite instability in cervical and endometrial carcinomas. *Int J Cancer* 1997; **70**: 499-501.
15 Vasen HF, Wijnen JT, Menko FH, Kleibeuker JH, Taal BG, Griffioen G, Nagengast FM, Meijers-Heijboer EH, Bertario L, Varesco L, Bisgaard ML, Mohr J, Fodde R, Khan PM. Cancer risk in families with hereditary nonpolyposis colorectal cancer diagnosed by mutation analysis (published erratum appears in *Gastroenterology* 1996; **111**: 1402). *Gastroenterology* 1996; **110**: 1020-7.
16 Boland CR, Thibodeau SN, Hamilton SR, Sidransky D, Eshleman JR, Burt RW, Meltzer SJ, Rodriguez-Bigas MA, Fodde R, Ranzani GN, Srivastava S. A National Cancer Institute Workshop on Microsatellite Instability for cancer detection and familial predisposition: development of international criteria for the determination of microsatellite instability in colorectal cancer. *Cancer Res* 1998; **58**: 5248-57.
17 Wijnen JT, Vasen HF, Khan PM, Zwinderman AH, van der Klift H, Mulder A, Tops C, Moller P, Fodde R. Clinical findings with implications for genetic testing in families with clustering of colorectal cancer. *N Engl J Med* 1998; **339**: 511-18.
18 Vasen HF, Mecklin JP, Khan PM, Lynch HT. The International Collaborative Group on Hereditary Non-Polyposis Colorectal Cancer (ICG-HNPCC). *Dis Colon Rectum* 1991; **34**: 424-5.
19 Vasen HF, Watson P, Mecklin JP, Lynch HT. New clinical criteria for hereditary nonpolyposis colorectal cancer (HNPCC, Lynch syndrome) proposed by the International Collaborative group on HNPCC. *Gastroenterology* 1999; **116**: 1453-6.
20 Watson P, Vasen HF, Mecklin JP, Jarvinen H, Lynch HT. The risk of endometrial cancer in hereditary nonpolyposis colorectal cancer. *Am J Med* 1994; **96**: 516-20.
21 Sijmons RH, Kiemeney LA, Witjes JA, Vasen HF. Urinary tract cancer and hereditary nonpolyposis colorectal cancer: risks and screening options. *J Urol* 1998; **160**: 466-70.
22 Alani E. The Saccharomyces cerevisiae Msh2 and Msh6 proteins form a complex that specifically binds to duplex oligonucleotides containing mismatched DNA base pairs. *Mol Cell Biol* 1996; **16**: 5604-15.
23 Edelmann W, Yang K, Umar A, Heyer J, Lau K, Fan K, Liedtke W, Cohen PE, Kane MF, Lipford JR, Yu N, Crouse GF, Pollard JW, Kunkel T, Lipkin M, Kolodner R, Kucherlapati R. Mutation in the mismatch repair gene Msh6 causes cancer susceptibility. *Cell* 1997; **91**: 467-77.
24 Leppert M, Burt R, Hughes JP, Samowitz W, Nakamura Y, Woodward S, Gardner E, Lalouel JM, White R. Genetic analysis of an inherited predisposition to colon cancer in a family with a variable number of adenomatous polyps. *N Engl J Med* 1990; **322**: 904-8.