Universiteit Leiden
The Netherlands

Materials and energy : a story of linkages

Kleijn, E.G.M.

Citation
Kleijn, E. G. M. (2012, September 5). *Materials and energy : a story of linkages*. Retrieved from https://hdl.handle.net/1887/19740

Version:	Not Applicable (or Unknown)
License:	Licence agreement concerning inclusion of doctoral thesis in the Institutional Repository of the University of Leiden
Downloaded from:	https://hdl.handle.net/1887/19740

Note: To cite this publication please use the final published version (if applicable).

Cover Page

Universiteit Leiden

Leiden University Repository

The handle http://hdl.handle.net/1887/19740 holds various files of this Leiden University dissertation.

Author: Kleijn, René
Title: Materials and energy : a story of linkages
Date: 2012-09-05

Chapter 6
The need for combining IEA and IE tools: The potential effects of a global ban on PVC on climate change

Abstract
Over the last decades the concepts of Integrated Environmental Assessment (IEA) and Industrial Ecology (IE), both claiming to provide analyses and solutions for sustainability issues, have been developed separately as they emerged in response to questions from different policy-fields. In both fields, specific tools are used to support national and international environmental policy. The focus of IEA and IE tools, however, is different. IEA tools focus on one or a limited number of specific environmental issues. They often model the chain environmental processes with high spatial (and temporal) resolution, but have a low resolution for the material structure of the economy and only partly take into account indirect effects that occur via physical and socio-economic linkages. IE tools take into account all environmental issues related to a specific substance or product. They have a high resolution for the material structure of the economy and take into account indirect effects that occur via physical linkages, however, their environmental modelling is very limited. Both IE and IEA tools have proven to be very useful and neither is superior to the other. However, a combination of both can provide additional information that can be used for more effective policy making. We use the case of a hypothetical world wide ban on PVC to show that a measure that is not directly related to climate change could still have significant climate effects. This indirect effect is a result of the linkages of material flows in society. We show that IEA tools are not well suited to include these types of effects and that IE tools can fill this gap partially. What is really needed is a broader systems perspective that takes into account the full range of possible side-effects of environmental policy measures.[1]

Published as: Kleijn, R., E. van der Voet, and H. A. Udo de Haes. 2008. The need for combining IEA and IE tools: The potential effects of a global ban on PVC on climate change. Ecological Economics 65(2): 266-281.

6.1 Introduction

Integrated Environmental Assessment (IEA) and Industrial Ecology (IE) are important concepts in the realm of sustainability and environmental sciences. Both concepts use a systems perspective to analyse similar environmental and sustainability issues. Therefore both concepts are quite comprehensive if one looks at the definitions that are used by their advocates (for Integrated Environmental Assessment see e.g.: Hettelingh et al. 2005, Van der Sluijs 2002; Rotmans and Dowlatabadi, 1997; for Industrial Ecology: Lifset and Graedel 2002; Allenby 1999). Although the definitions of the concepts are overlapping to a large extent, the tools that

[1] An update on this issue is given in Chapter 7.

practitioners in the fields use are distinct both in their structure as well as in the questions they answer. To our knowledge this is the first attempt to illustrate the differences between these two concepts when applied to a specific case and to highlight the possibilities for combing them in a more comprehensive analysis.

Integrated Environmental Assessment tools are often used for scenario analysis, to calculate future trends in emissions and related environmental issues. These calculations are made on the basis of socio-economic indicators at the macro-level, such as developments in GDP and population. Current IEA tools are built around specific, large-scale environmental issues such as climate change and acidification. Although existing Integrated Environmental Assessment tools contain complex dynamic models of the economy, the resolution in terms of material flows in society is rather low (Figure 6-1).

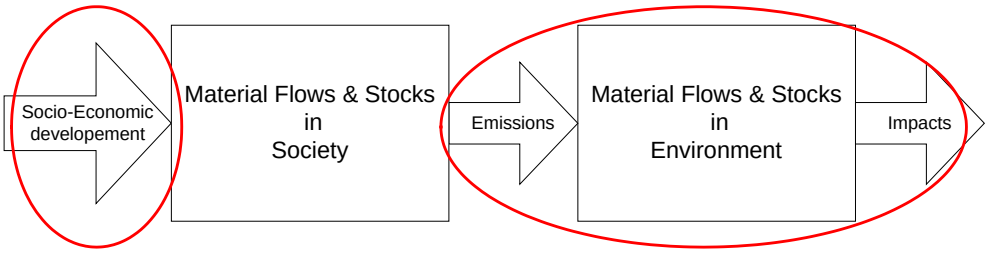

Figure 6-1: The main focus of Integrated Environmental Assessment tools

The emissions are calculated on the basis of the dynamic development of a few highly aggregated economic sectors. Interconnections between material flows within society are not systematically accounted for. However policy measures aimed at reducing environmental issues mostly have a number of widely different impacts, often also outside the realm of the environmental issue they address (Raadschelders et al., 2003). Examples are: economic accumulation, relocation of pollution, substitution of one emission by another, dilution of emissions and co-recycling of contaminants (Raadschelders et al., 2003). Studies in the emerging field of Industrial ecology have clearly shown that side-effects of environmental policy measures are often caused by changes in the closely interconnected material flows in society (e.g. Ayres & Simonis 1994; Ayres & Ayres, 1996; Baccini & Bader 1996; van der Voet et al., 2000; Bourg & Erkman, 2003). Because of this interconnection, problem shifting from one substance to another, from one environmental problem to another, or shifts in time and space often occurs as a result of policy measures. Co-benefits and co-damages of policy measures that occur via the interconnections of material flows in society can easily be overlooked by IEA tools.

The aims of Industrial Ecology are, as indicated above, quite similar to those of IEA. In contrast, the tools connected with this concept are quite different. Industrial Ecology tools are mainly used to analyse and assess the environmental effects of

changes in material flows in society. Material Flow Analysis (MFA) and Substance Flow Analysis (SFA) are used to analyse the flows of materials or specific substances in society and their interconnections.

The resolution of IE tools is high in terms of material flows in society and their interconnections, for example linked to product life cycles, and in how these material flows result in emissions (Figure 6-2). In the environment, on the other hand, the resolution is low: environmental impacts are modelled roughly or not at all like in MFA/SFA, or in terms of potential impacts with low spatial resolution like in LCA. Furthermore, the link with macro-economic drivers is weak. The result of most LCAs is only valid if the differences that are described are marginal from a macro-economic point of view. MFAs and SFAs describe also non-marginal changes but they are not systematically linked to socio-economic developments.

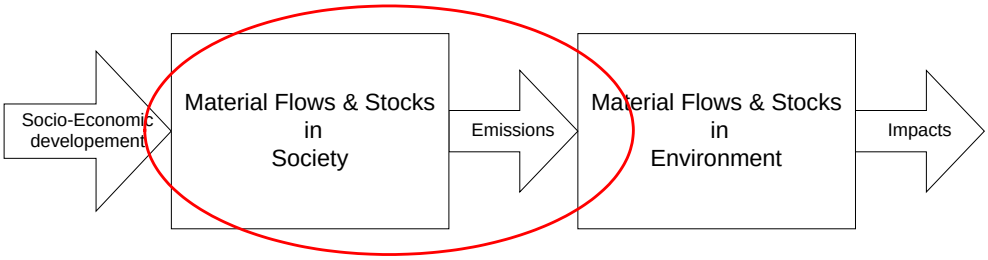

Figure 6-2: The main focus of Industrial Ecology tools

Our hypothesis is that the systems perspective on material flows in society that is provided by Industrial Ecology tools can be used in addition to Integrated Environmental Assessment tools, (1) to detect and therefore prevent different forms of problem shifting, or in other words to identify co-benefits and co-damages of environmental policy measures, techniques, transitions etc., and (2) to identify potential environmental impacts of policy measures aimed not at specific environmental issues, but at materials and products in society.

In this article we will show that tools related to Industrial Ecology analysing material flows in society can provide important additional information compared with IEA tools. In order to illustrate this we will use the example of a hypothetical world wide ban on the production of PVC. This example is chosen for several reasons. First of all, it refers to a long-standing and still ongoing environmental debate. For that reason, PVC has been subject to policies both on the national (VROM, 1997) and on the European level (Commission of The European Communities, 2000 and European Parliament, 2001). Secondly, phasing out PVC implies a large-scale change which cause far reaching changes in industrial sectors and thus possibly also in the environmental flows, both directly and indirectly. In the third place, it aims at changes in material flows in society and therefore is suitable as a case to illustrate the value of using Industrial Ecology tools in addition to an Integrated Environmental Assessment approach. In Section 2, a brief description is provided of the PVC and chlorine

debate. Section 3 describes the above mentioned tools of Integrated Environmental Assessment and Industrial Ecology. In Section 4, the tools are applied to assess the impacts of a hypothetical PVC ban. Section 5 generalises these findings and treats the need for a wider perspective. Conclusions are presented in Section 6.

6.2 The PVC and chlorine debate

Chlorine and chlorinated compounds have been an important part of the chemical industry since the early 1940's. DDT was found to be very useful because its acute human toxicity is extremely low, and therefore it was thought of as a very safe pesticide. The same holds true for CFCs as aerosol. PVC has become one of the major plastics because of its inertness and because its properties can be manipulated relatively easily by adding all sorts of additives. Furthermore, chlorinated compounds have become very popular intermediates in chemical industry. It is relatively easy to replace hydrogen by chlorine in a hydrocarbon compound while this chlorine in turn can relatively easily be replaced by other functional groups.

Environmental concerns around chlorinated compounds started with concerns about the ecotoxicological impacts of DDT and Drins (a group of pesticides) in the late nineteen sixties. Later, the ozone depleting impacts of CFCs were discovered and PCBs were added to the list of toxic and persistent chlorine compounds. With the discovery in the nineteen eighties of the fact that in many processes unintended production of extremely persistent and toxic dioxins occurred, the use of chlorine in the chemical industry became strongly debated. Many of the compounds that are nowadays on the list of most hazardous substances are chlorinated compounds. Environmental NGOs, supported by a number of scientists and GOs, have been calling for a complete ban of chlorine from the chemical industry. PVC has been in the centre of this discussion because it is the only bulk polymer (next to neoprene) that contains a substantial amount of chlorine (up to 56% on weight basis) and because of the fact that dioxins are produced when incomplete combustion of PVC occurs. Another argument against PVC was put forward recently, concerning the additives. Toxic phthalates are used as a plasticiser in flexible PVC, which for example was often used in baby-toys. Still another argument that is used against the use of PVC is the adverse effects of PVC on the recycling of mixed plastics. Both the chlorine and the additives interfere with the recycling process. Although toxicity issues have been the driver of the PVC/chlorine debate in the early days, nowadays it is clear that other environmental issues are involved as well. Climate change is introduced as an issue in the assessment of plastics in general, for example when comparing fossil fuel-based plastics with bio-based alternatives. Acidification is also an issue, specifically related to PVC, because of the formation of hydrochloric acid in waste incineration. Finally public safety is now an important issue in the chlorine debate, mainly connected to the transport of chlorine by train through densely populated areas.

There are many sides to the issue of PVC, or, more broadly, chlorine. The stalemate in the societal debate seems to center around a difference in basic starting points (Tukker 1999, Kleijn et al., 1997). The NGO's take the point of view that there are alternatives to all chlorine applications, consequently they argue that a ban on chlorine is possible and should be effected in view of all certain and uncertain adverse impacts. In contrast, the industry starts from the wide usefulness of chlorine, and argues that substitution is only useful if the alternative is proven to have less impacts. It could be useful, therefore, to assess the impacts of a measure such as a complete ban on PVC. What would be the environmental benefit? Are the alternatives functionally equivalent, and is their impact on the environment indeed less? The PVC case is used here to illustrate the differences between the IEA and IE approaches, single out their strong points and limitations, and say something about the way they could be improved and mutually benefit from each other.

6.3 IEA and IE Tools

6.3.1 Integrated Environmental Assessment tools

There are many Integrated Environmental Assessment tools. In Figure 6-1 the main focus of Integrated Assessment tools is illustrated. For practical reasons we will use the Climate Change tool IMAGE (IMAGE team, 2001) and the acidification tool RAINS (Amann et al., 2001; Hettelingh et al., 2005) as examples here. Both tools have been very successful in supporting policy on both the national and the international level.

RAINS has been developed by IIASA (Alcamo, 1990; Amann et al., 2001; Hettelingh et al., 2005) as a tool for the integrated environmental assessment of alternative strategies to reduce acid rain deposition. RAINS is an abbreviation of 'Regional Air Pollution INformation and Simulation'. RAINS Europe, which was developed on the basis of the original RAINS, expanded its scope from acidification to eutrophication and ground-level ozone. Recently the scope of RAINS was further broadened to include fine particulate matter (Schöpp et al, 1999). The tool consists of five modules:

1. developments in energy use, agricultural and other productive activities, delivering emissions of acidifying compounds;
2. and 3. two modules on emissions and control costs;
4. atmospheric dispersion;
5. environmental impacts (environmental effects in RAINS terminology).

Any changes in the flows of materials in society have to be translated in terms of the first module. In this module, emissions of three acidifying compounds (sulphur dioxide, nitrogen oxides and ammonia), VOC and fine particulate matter are calculated by using the characteristics of different energy sources and agricultural activities. This is done on the basis of a database on energy use and agricultural activities for 38 European countries and regions, 21 energy sources and 6 economic sectors. Locations of emissions and depositions are specified and the output of the tool can be given as a map consisting of grid cells with different colours that correspond with the level to which critical loads are exceeded.

RAINS Europe was used to provide scientific support for the negotiations under the Geneva Convention on Transboundary Air Pollution in Europe (Overseas Environmental Cooperation, 2000). The European commission has decided that IIASA's RAINS tool will serve as the core Integrated Environmental Assessment tool in the framework of the 'Clean Air For Europe' (CAFE) programme (IIASA, 2003).

The Integrated Model to Assess the Global Environment (IMAGE) tool has been developed by RIVM (IMAGE team, 2001) as a tool for the integrated environmental assessment of global change. IMAGE 2.2 consists of three modules:

1. The Energy Industry System (EIS), which calculates regional energy consumption, energy efficiency improvements, fuel substitution, supply and trade of fossil fuels and renewable energy. On the basis of energy use and industrial production emissions are calculated.
2. The Terrestrial Environment System (TES) which calculates land-use changes on the basis of data on developments in agriculture and forestry. Furthermore it calculates emissions from land-use changes, natural ecosystems and agricultural production systems, and the exchange of CO2 between terrestrial ecosystems and the atmosphere.
3. The Atmospheric Ocean System (AOS), which calculates changes in atmospheric composition using the data from the EIS and TES modules, and taking oceanic CO2 uptake and atmospheric chemistry into consideration. Subsequently, AOS calculates changes in climatic properties by resolving the changes in radiative forcing.

IMAGE and other IEA climate change tools have been used as a basis to support the discussions in the Intergovernmental Panel on Climate Change (IPCC) (de Vries et al., 2001). The IPCC, in turn, provided policy makers with scientific assessments that were used as an input for the development of international conventions like the United Nations Framework Convention on Climate Change and the Kyoto protocol that resulted from that.

The starting point for calculating the impacts of a ban on PVC obviously is the EIS module, and more specifically TIMER (the Targets IMage Regional simulation model). TIMER is used as a sub-module within the EIS module and simulates the global energy system on the basis of data on 17 world regions. The main objectives of TIMER are to analyse the long-term dynamics of energy conservation and the transition to non-fossil fuels, and to explore long-term trends for energy-related greenhouse gas emissions (de Vries et al., 2001). TIMER will also be used in future versions of RAINS.

The perspective of these IEA tools is limited because:

1. the thematic character of the tools: they only address a specific environmental issue. For example impacts of an energy oriented measure on toxicity are outside the scope of climate change tools;

2. the resolution of the economic driver modules is low. Small scale measures, for example aimed at specific industries, are out of sight because their influence on the economic development of the aggregated sector will be small;
3. material flows in society and their linkages are absent. Therefore these tools are blind for effects that occur via product and material chains and lifecycles. One example of this is the PVC case which is described in this article.

There may be different ways to address the limitations of these tools. To detect side-effects to other environmental issues, the different thematic IEA tools could be linked. To resolve the low resolution problem, for example, more detail may be brought into the economic driver module. Other tools might be used in addition to IEA tools to provide a more complete picture. Here we focus on the combination of IEA tools with IE tools

6.3.2 Industrial Ecology tools

Similar to Integrated Environmental Assessment, there are many different analytical tools in the field of Industrial Ecology. In Figure 6-2 the main focus of Industrial Ecology tools is illustrated. Again for practical reasons we have chosen two tools that will be applied on the case of PVC: Substance Flow Analysis (SFA) and Life-Cycle Assessment (LCA). Both tools have been used frequently to analyse the societal metabolism of certain substances (SFA) and societal material flows connected to products and services (LCA).

Environmental Life Cycle Assessment is an IE tool that can be used to compare the potential environmental impacts of productsystems. A product system consists of all processes in the lifecycle of a product or services: from extraction of raw materials via the production, to use, recycling and final waste disposal. (e.g. Guinee et al. 2002; ISO 14040). It can be used, therefore, to compare PVC applications with certain PVC free alternatives. LCA is by nature a static tool in which 'ceteris paribus' conditions will normally be used for the calculations, although more advanced types of LCA are being developed (Wrisberg et al., 2002). Like SFA, LCA is a tool that, in principle, can be applied to all products and services. The first phase therefore is the definition of the specific research question(s) and selection of the products or services that are being compared. In the next phase, the inventory analysis, the relevant process data are collected and the emissions, extractions and possibly other interventions of the whole product system are calculated. In the impact assessment phase these interventions are translated into potential contributions to selected environmental issues. In the impact analysis so-called characterisation factors are used to indicate the potential environmental impacts of the specific emissions and extractions. If possible internationally accepted factors like Global Warming Potentials and Ozone Depletion Potentials are used as characterisation factor. One way in which IEA and LCA are linked is the use of these factors which can be seen as a result of IEA tools. IEA tools are also more and more used to generate spatially differentiated characterisation factors (e.g. Potting, 1998 et al. and Potting, 2000). In some cases the results are

weighted and added to one single environmental score. Nowadays LCA types of analysis are used increasingly for larger systems, e.g. to compare different systems for the energy supply in a certain region or country.

Substance Flow Analysis (SFA) has been developed as a quantitative analytical tool to keep track of the flows of a certain substance or substance group in society. SFA can be used for different purpose: As an accounting system, large flows or accumulations can be signalled that may cause environmental issues in the future. If repeated regularly, trends in certain flows can be detected. As a static or steady state model, it can be used to trace back environmental issues to their origins: the flows of substances in society. The steady state model can also be used to study the effectiveness of policy measures. SFA as a dynamic model can be used to estimate future flows and stocks. In dynamic SFA societal stocks are included and time is thus entered as a variable in the model, and dynamic scenario analysis is made possible (Kleijn et al., 2000, Elshkaki et al., 2005). The framework of SFA can be applied to any (group of) substance(s) and on any geographical level or region. The starting point for an SFA is often a specific environmental problem. The substances contributing to this problem are identified and the geographical and temporal system boundaries are set. SFA is obviously suitable to describe and analyse societal flows and stocks of PVC, and the changes therein as a result of policy measures. The consequence for the environment are more difficult to address since the focus is limited to the substance(group) which is studied.

Not only the scope, but also the policy implications of Industrial Ecology tools are different compared with the IEA tools. Integrated Environmental Assessment tools are used to support policies on specific environmental issues while the IE tools are used in product policy and chemicals policies both in the private sector and by governmental agencies. In addition Life Cycle Assessment (LCA) is sometimes use to support environmental labelling and certification (Guinée et al, 2002). SFA has been used to analyse the societal material flows which cause certain specific environmental issues (Van der Voet et al., 2000, Hansen and Lassen, 2000). Potting (2000) has shown that the IEA tools can be used to introduce spatial differentiation in LCA.

6.4 Applications of IEA and IE tools on the case of PVC

Before applying any analytical tools, we must have a rough idea on what would happen in case of a world-wide ban on PVC. A simplified schematic overview of the production and use of PVC is given in Figure 6-3. PVC is produced via the polymerisation of vinyl chloride monomer (VCM) which in turn is produced from ethylene dichloride (EDC). EDC is produced via a combination of direct chlorination (with chlorine) and oxy-chlorination (with HCl) of ethene. The main applications of PVC are in profiles for construction (pipes, window frames etc), insulation material (electrical cables), flooring and packaging. At first glance, a ban on PVC would result in:

- the dismantling of PVC production facilities (or transformation in order to produce other products which in this case is not very likely);
- a drop in the demand for the raw materials for the production of PVC;
- a substitution of PVC by other materials in products in which PVC is used at the moment.

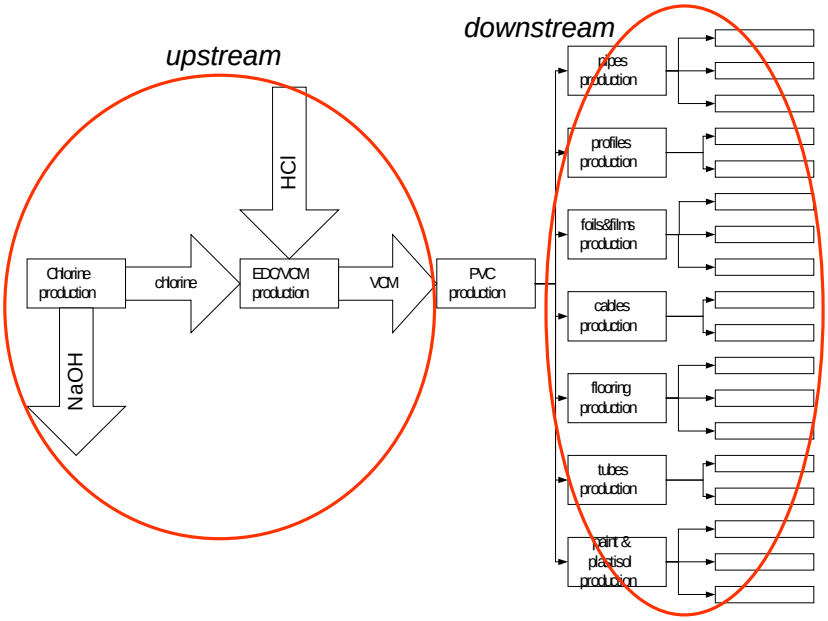

Figure 6-3: A simplified schematic overview of the production and use of PVC.

Of course all these effects would result in changes in material and energy flows through society. This in turn would affect extractions and emissions and thus environmental impacts. Emissions of e.g. phthalates, dioxins and other chlorine compounds, and extractions of fossil fuels would change. However a ban will also result in changes in greenhouse gas and acidifying emissions. Half of the mass of the PVC polymer is determined by chlorine, therefore if PVC is replaced by pure hydrocarbon plastics such as polyethylene (PE), more fossil fuels will be needed to

produce the same amount of plastic. On the other hand, if PE-waste is incinerated with energy recovery, a part of the energy in the fossil fuels used to produce the PE will be recovered. Naturally, the drop in PVC related impacts will coincide with an increase of impacts related to the alternatives for PVC. The question is, which of these and other direct and indirect impacts will become visible when applying the IEA and IE tools. This is treated below.

6.4.1 Application of IMAGE on the case of PVC

In terms of IMAGE a ban on PVC should be translated in terms that can be used as a change in the Energy and Industry System. In this system there are two modules that are of interest in this case: the Energy & Industry emissions and the Energy Demand & Supply module (TIMER). The Energy & Industry module contains lists of industrial sectors together with emission factors for non-energy greenhouse gas emissions. Economic data on the development of these sectors is used to calculate the greenhouse gas emissions from these sectors over time. The feedstock or chemical manufacture sectors are in principle relevant for this case, but the resolution of these sectors is to low to distinguish a single polymer like PVC. Therefore there is little opportunity to use this module for the calculation of the effects of this ban on PVC. The introduction of the ban on PVC in the Energy Demand & Supply module is also problematic. On first sight a ban on PVC does not result in a large change in the global energy demand. One example is the substitution of PVC by PE as a plastic. Since the substitution of PVC by PE will result in an increased demand for fossil fuels as feedstock (PVC consists for about 50% of chlorine while PE comes for 100% from fossil fuels) this can be translated in a change of demand for fossil fuels. For this, the ban on PVC would have to be translated in a change of certain variables in TIMER that would result in changes in greenhouse gas emissions. However, since the resolution of TIMER is very low if it comes the use of fossil fuels as feedstock, again it is not straightforward how a ban on PVC could be translated in terms of IMAGE.

It is clear that IMAGE can not be used directly to calculate the changes in emissions of greenhouse gas (GHG) emissions connected to a ban on PVC due to the fact that neither the EIS nor the TIMER module have the appropriate resolution. Of course it would be possible to first calculate the changes in greenhouse gas emissions by other means, and to use the obtained reduced greenhouse gas emissions as an input for IMAGE. However, this solution is not optimal since for every measure a separate analysis would be needed. Another solution could be to increase the resolution by, for example, distinguishing not 5 but 500 sectors of industry, similar to the resolution in current Input-Output Analyses. The PVC producing industry then could be one of those sectors. A measure such as phasing out PVC would then be translated in the decline of the PVC industry and the concurrent growth of, for example, the PE producing industry. It is very likely that the changes in GHG emissions resulting from this change as calculated in TIMER would be minor, and that the measure could indeed be considered too small to be relevant. Moreover, indirect effects as well as side-effects to other environmental issues would still be out of sight.

6.4.2 Application of RAINS on the case of PVC

When attempts are made to translate the phase-out of PVC into terms of changes in inputs for RAINS, similar problems do occur. Like in IMAGE, the resolution on the material flows in society in RAINS is relatively low although emission reduction technologies are quite specified. The economy is divided in 6 economic sectors and 21 energy sources. A measure like the phase-out of PVC is again too small to be implemented in RAINS as such. Like in IMAGE, it would of course be possible to first calculate the changes by other means and then to use the results in terms of changes in emissions as an input for RAINS. Adding more resolution could be another option here as well, with similar implications as described in section 4.1. An additional interesting point is that the incineration of PVC generates HCl which contributes to acidification. A phase-out of PVC would thus reduce the HCl emissions and thereby acidification. HCl emissions are not included in RAINS, therefore these changes are invisible. This could be repaired, however, by adding HCl as an acidifying substance. All in all it is clear that, because of the low resolution of RAINS if it comes to material flows in society, a measure like a phase-out of PVC is a measure to small for RAINS to handle.

In the next sections, we apply Industrial Ecology tools to see whether indeed phasing out PVC is a small, non-relevant measure. We will focus mainly on the changes in emissions of climate change and acidifying compounds via indirect routes, including substitution and effects based on the linkages of material flows within the relevant sectors. Side-effects on other environmental issues will also be visible, but we consider this self-evident and it will not be the main focus. The interesting question is: can changes in the emissions that do not come forward in IEA tools, either due to a lower resolution or to indirect effects, be detected with IE tools?

6.4.3 Application of LCA on the case of PVC

When a ban on PVC would be implemented PVC would be replaced by other materials. LCA can be used to calculate the potential environmental impacts of the substitution of PVC with alternatives like polyethylene (PE) and polypropylene (PP). In LCA the whole life cycle is considered so all processes of the lifecycle, from the extractions of resources such as salt and crude oil to the final waste treatment of the products, are included.

Many of such LCAs have been made for PVC products and their alternatives. Although there are some good reasons why LCAs cannot cover all details of the discussions on toxicity related to the PVC lifecycle (Tukker, 1998), they can still be used to get some indication of the relative impacts of PVC products on many other environmental issues like climate change. A simple qualitative meta-analysis was made of existing LCAs of PVC products and alternatives. 22 studies were considered of which 8 were part of other meta-studies (PVC LCAs: Reusser, 1998; Richter et al, 1996; Potting and Blok, 1994; Intron, 1995; de Baere et al., 1994; Verspeek et al., 1992; Beenen and Eygelaar, 1993, Tötsch, W. and H. Polack 1992, FKS, 1995; Albrecht and Langowski, 1997; meta studies: Krahling 1999; Finnveden et al., 1996).

All studies give answers to the question whether or not replacing PVC by alternatives in specific applications would be beneficial for specific environmental issues. The alternatives depend on the applications but consist of other (HD)PE, PP in different applications, aluminium and wood in window frames, linoleum and wool in carpets, glass and paper in packaging etc. (Table 6-1).

Table 6-1: Results of LCAs of PVC and alternative materials in different products (in relative ranking, 1=least impact)

	product (reference)	**compared materials**	energy use	waste	global warming potential	acidification	nutrification	photochemical smog formation	toxicity	abiotic depletion
1	potable water pipeline systems	PVC	2		1	3	2			
	(Reusser, 1998)	HDPE	3		2	2	3			
		cast iron	1		3	1	1			
2	sewage pipeline systems	PVC	2		1	3	3			
	(Reusser 1998)	HDPE	3		1	2	2			
		stoneware	1		2	1	1			
3	windowframes	PVC	2	3		4		4		
	(Richter et al, 1996)	aluminium	4	4		5		3		
		steel	5	5		3		5		
		stainless steel	6	1		7		6		
		non-ferrous+B84 metal	7	2		6		7		
		wood/Al	3	6		2		2		
		wood	1	7		1		1		
4	flooring	cushion PVC	3	2	2	3	2	3		
	(Potting & Blok, 1994)	linoleum	1	1	1	1	1	1		
		woollen carpet	2	4	4	3	4	4		
		polyamide carpet	4	3	3	2	3	2		
5	sewage pipelines	PVC (3 layers)	3	3				3	3	3
	(Intron, 1995)	concrete	1	1				1	1	1
		gres (stoneware)	2	2				2	2	2
6	bottles for non-sparkling water	PVC	2	3	1	3	1	1	2	2
	de Baere, et al., 1994)	PET	3	2	3	1	2	3	2	1
		glass	1	1	2	2	3	2	1	3
7	blisters for medical tablets	PVC-Al	1	2	1	2	2	1	2	3
	de Baere, et al., 1994)	PP-Al (BUWAL)	2	1	3	1	1	2	1	1
		PP-Al (PWMI)	3	1	2	3	3	1	3	2

	product (reference)	compared materials	energy use	waste	global warming potential	acidification	nutrification	photochemical smog formation	toxicity	abiotic depletion
8	potable water pipelines	PVC	2						2	1
	(Verspeek et al, 1992)	asbestos cement	1						1	1
		cast-iron	4						1	2
		steel	5						5	1
		glassfiber/polyester	2						3	1
		glassfiber/epoxy	3						4	1
9	ring binders	PVC	5	5					4	
	(Beenen & Eygelaar, 1993)	PVC glued	3	4					3	
		PP	2	1					1	
		PP glued	4	2					2	
		cardboard PP lam.	1	3					5	
10	blisters	PVC	1						1	
	(Tötsch and Polack, 1992)	PET	2						2	
11	blisters for medical tablets	PVC/Al	1						2	
	(Tötsch and Polack, 1992)	PP/Al	2						1	
12	wounddrain bottle	PVC	1						2	
	(Tötsch and Polack, 1992)	PET	2						1	
13	main sewage pipes	PVC (recycled)	1	1					2	3
	(FKS, 1995)	Gres (stoneware)	3	2					3	1
		concrete	2	3					1	2
14	flooring resilient	PVC	4	5	5	4				
	(Albrecht & Langowski, 1997)	PVC cushion	2	4	4	3				
		polyolefine	3	2	1	2				
		linoleum	1	1	6	1				
		rubber	5	3	3	5				
		parquet	7		7					
		textile	6		2					

The relative ranking of the impacts of consequences for the different environmental issues that were included in each study was determined (Table 6-1). PVC scores relatively good on climate energy use and climate change. This is due to the fact that only half of the weight of PVC comes from fossil fuels, contrary to other plastics. The scores are however influenced by assumptions that are made for waste treatment. If a waste treatment is assumed with an efficient energy recovery system, the advantage of PVC over PE and PP is reduced. PVC is worse than PE if it comes to acidification because hydrochloric acid is produced during the incineration of PVC waste. PVC also scores worse on toxicity impacts. This is caused partly by the emissions during production and use, and partly by dioxin emissions during waste treatment.

In order to draw some strong conclusions on the basis of a meta study differences in methodologies, assumptions and quality of the LCA studies should be considered. However, on the basis of this very rough survey it seems that replacing products containing PVC with alternatives that are free of PVC might reduce toxicity problems and acidification, but on the other hand could increase the problem of climate change.

It is clear that these LCA studies can be used to compare the environmental impacts of PVC products with its alternatives. The methodological limitations of such studies should however be kept in mind. The product system of PVC, or process tree, is built up out of processes that are linked to each other in a linear way. Since standard LCAs use the assumption of *ceteris paribus* the effects of replacing 1 kg of PVC by e.g. 1 kg of PE can be assessed. However, the effects of replacing the total PVC production and consumption chain by a PE chain would need more than a standard LCA. The effects of changes in the market for chlorine and other intermediates and the possible dismantling of chlorine production plants are not included. To answer that type of question LCA is not the right tool. LCA is more suited to answer *smaller* questions like: *what material, from an environmental point of view, would be best to use in a specific product?* Although a standard LCA does not answer the question: *what would be the environmental impacts of a ban on PVC,* it can still be used to answer a part of this question: *how does PVC compare environmentally to its alternatives in specific applications ?*

6.4.4 Application of SFA on the case of PVC

In case of a world-wide ban on PVC, the SFA region is defined as the world as a whole and the material is PVC. An SFA of PVC as a substance would result in an overview of PVC flows and stocks in the world. These PVC flows can then be connected to environmental problem flows like those of phthalates and heavy metals which are used as additives (Tukker et al. 1997, Tukker et al., 1998). Although this is interesting when one wants to highlight the most important flows in the total metabolism of a material it does not answer the question *what would be the environmental impacts of a ban on PVC ?* The answer to this question on the basis of an SFA of PVC is that all the flows, thus also all the problematic flows, would gradually disappear as the stocks in society will decrease over time. Any alternatives or shifting of problems via other materials or processes is out of sight.

If one would broaden the scope of the SFA by choosing chlorine as the substance for the analysis, the interconnections of PVC to the rest of the chlorine chain become visible. Several of these studies have been done on different geographical levels (Tukker et al., 1995; Ayres, 1997; Ayres and Ayres 1997; Ayres, 1998; Kleijn et al., 1997; Kleijn and Van der Voet, 1998). These studies show the quantitative relationships between PVC and the rest of the chlorine chain. These quantitative relationships can be used to assess the changes in chlorine chain as a result of a ban of PVC. Practically the only use of VCM is the production of PVC and its co-polymers. A ban on PVC would therefore make the VCM production obsolete. To a lesser extent the same is true for EDC: although there are some other applications, the bulk of the EDC production is used for the production of PVC. One step further upstream

the SFA studies on chlorine show that PVC is by far the most important single end-use of chlorine. In 1992, 38.6% of the produced chlorine in Western Europe was used to produce vinyl chloride monomer (VCM) which is almost totally used for the production of PVC (Kleijn and Van der Voet, 1998). In that same year, 32% went to the production of PVC in the US (Ayres and Ayres, 1997). Thus in the end a ban on PVC would result in a strong reduction of the demand for chlorine (Figure 6-4).

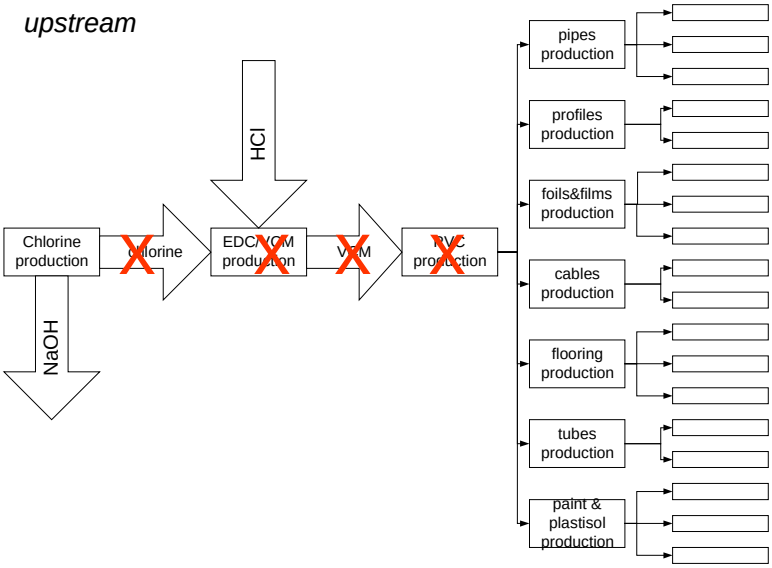

Figure 6-4: A ban on PVC would result in a strong reduction of demand for chlorine.

Furthermore the production of PVC is linked to other parts of the chlorine chain via the use of hydrochloric acid (HCl) in the production process. A substantial part of the chlorine used to produce PVC comes from HCl. Nowadays many of the products of the chlorine industry do not contain chlorine. Instead, chlorine is used during the production process and (partly) returned either as chloride salts or as HCl. A time series SFA would show a gradual shift from chlorine containing end-products to chlorine-free products using chlorine as an intermediate in the production process. This by-product HCl can be regarded as an inevitable and undesirable by-product and it is not so easy to deal with. The most favourable and in fact most wide-spread option is to use this HCl again in the production of chlorinated compounds, especially PVC. In case of a world-wide ban, this sink for HCl would no longer exist. This in turn would stimulate the use of HCl/chlorine recycling loops (see textbox/endnote) which in turn would cause a sharp decline in the demand for chlorine and, together with the reduction in primary demand for chlorine, could make the chlorine production obsolete (Figure 6-5).

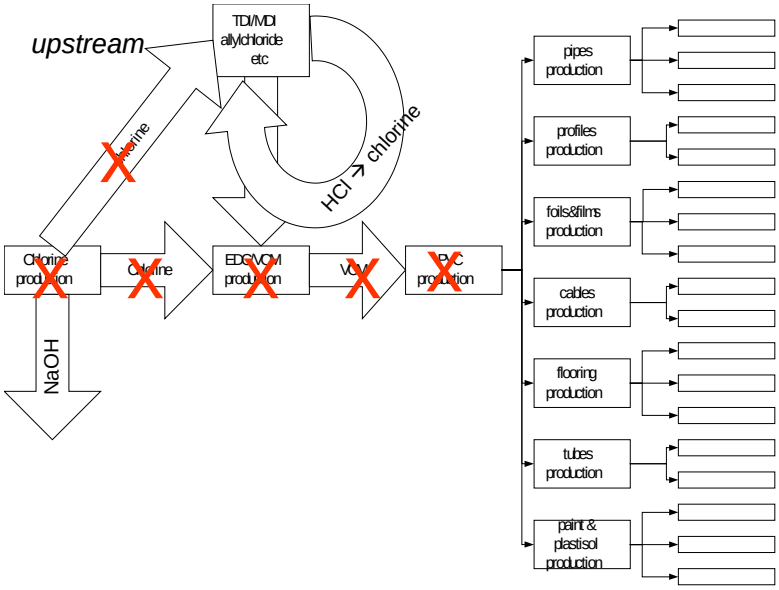

Figure 6-5: A ban on PVC would stimulate the use of HCl/chlorine recycling loops which in turn would cause a sharp decline in the demand for chlorine and, together with the reduction in primary demand for chlorine, could make the chlorine production obsolete.

Although an SFA of chlorine shows and quantifies the interconnections between PVC production and the rest of chlorine chain it too has a limited focus: it focuses on flows of chlorine only. A drastic change in the chlorine production would also affect other non-chlorine industries that are connected to the chlorine industry. One very straightforward example of this is the linked production of chlorine and caustic soda (Kleijn et al. 1993). The electrolysis process in which chlorine is produced in fact produces 1.1 kg of caustic soda (NaOH) for every kg of chlorine. If chlorine production would stop, another source would have to be found for caustic soda. This link, and other links, are invisible in an SFA on chlorine.

HCl as a key substance in the chlorine industry
HCl is a key substance in the chlorine industry. It is produced as a by-product in the production of products of the chlorine industry that contain less chlorine then the starting materials or no chlorine at all themselves. It's single most important use is the production of PVC via the oxy-chlorination process. In most processes HCl is produced in its pure form, as a corrosive gas, but in some processes it is produced in the diluted form of hydrochloric acid. There are three major options to get rid of HCl as a that is prod uced by-product: HCl can simply be diluted and/or neutralised and discharged as chloride into waste water streams, it can be diluted and sold and on the market as hydrochloric acid or it can be used to make other chlorinated compounds, including chlorine. Discharging in the form of chloride is an option when the production units are located near an ocean but it would be a problem at locations more inland. In the production of TiO2 (a white pigment) chlorine is completely converted to a 30% solution of hydrochloric acid. However, because this acid is contaminated with silicates it is often simply neutralised with lime to produce calcium chloride which can either be disposed in a nearby ocean or dumped at a solid waste disposal site (e.g. http://www.chemlink.com.au/caustic_oz.htm). Selling HCl on the market is not always an economic option because of limited demand, transport costs and costs of the demineralised water which is needed to dissolve the HCl gas and the costs of removing traces of organics from the HCl gas (Motupally et al., 1998). Re-using HCl in the production of chlorinated chemicals like PVC is often the most favourable option.

The main sources of HCl in the Europe are the production of the isocyanates MDI and TDI (precursors of polyurethane (PUR) foams) potash fertiliser, allyl chloride, monochloroacetic acid (MCA) and of chloromethanes (Kleijn and Van der Voet, 1998). Before 1995 another important source was the production of (H)CFCs but this production has been banned almost completely at this time. Another source of HCl is the incineration of chemical waste from the chlorine industry (light and heavy ends).

In general the processes in which HCl is being produced grow faster than the processes in which HCl can be used. Thus HCl supply is larger than the demand and this imbalance will continue to grow in the near future. A ban on the main process in which HCl is used, the production of PVC, will have a heavy toll on the production processes that produce HCl as a by-product. Since this problem is already occurring even without the ban, the industry is looking for alternative ways to get rid of the excess of HCl. One of the options is to convert HCl back into chlorine, the feedstock of many of the processes in which HCl is the by-product. Two routes for this process have been available for some decades. The first option is the Uhde electrolysis in which HCl is absorbed in water and than electrolysed to hydrogen and chlorine. The main disadvantages of this process are that a small amount of oxygen is being co-produced which leads to corrosion of the cell components and that the produced chlorine contains 1-2% water which has to be removed. The second option that has been available for some time is the Deacon process in which HCl together with oxygen is catalytically converted to chlorine and water. The main disadvantage of this process is that it is very energy intensive (the process is operated at 400-450 ºC) and the co-production of water demands an extensive separation step. Since these two existing processes have important drawbacks which makes them economically less favourable new processes are being developed. One of those processes is a direct electrolysis of gaseous anhydrous HCl patented by DuPont (Trainham et al., 1995) . With this process both the absorption step and the water separation step can be skipped. Furthermore, the diffusion coefficients in the gas phase are much higher than those in aqueous solutions which increases the overall efficiency of the process. It can be expected that other processes will be developed in the near future. This is an interesting development from an industrial ecology perspective because this opens the opportunity to close the loop for processes in which chlorine is used and HCl is produced as a by-product. For example the production of MDI and TDI can be done in a closed system in which chlorine is continuously recycled from HCl to Cl_2 that would make the input of new chlorine obsolete.

6.4.5 Need for a broader perspective

In the previous paragraphs a description is given of the results of the application of different existing IEA and IE tools on the case of a ban on PVC. It is clear that a combination of IEA and IE tools can give a more complete analysis of the environmental impacts of a ban on PVC than either could give individually. IMAGE and RAINS would either need a much more detailed module to calculate emissions from industry in order to be useful at all in this case, or must be supplemented by other information. IE tools offer some insight in environmental impacts, each in a different way. They even could generate some input for the IEA tools. An LCA could be used to spot differences in energy use, greenhouse gas emissions or emissions of acidifying compounds as a result of the substitution of PVC by other plastics. An SFA quantifies the links of PVC to the rest of the chlorine industry and thereby could deliver some input to calculate the changes of energy use on that basis. But still each of these tools would only put the spotlight on a part of the total effects of such a ban. All tools proclaim to use an encompassing systems approach but in fact they are only partial and all have blind spots for certain kinds of effects. To get the complete picture, a broader approach is needed.

6.5 Application of a broader systems perspective

In the end, we come to the question which should have been the start: *what would really happen in case of a world-wide ban on PVC, apart from any specific tools to analyse it?*

In order to get a realistic answer to this question one has to start with a broad systems analysis which is not hindered by any constraint that is laid down by individual tools i.e.: the limitation to one substance in SFA; the limitation to bulk materials in MFA; the limitation to one product(system) and marginal linear changes in LCA; the limitation to one environmental problem in RAINS and IMAGE; the limitation to very aggregated material flows in society in IEA tools etc. One has to start with a general system description of the actual situation including all types of interconnections in society and the environment in qualitative way. This qualitative system description can then be extended with quantitative information from the different available tools. As an example we will now do this exercise for the PVC example.

SFA has shown that a combination of a ban on PVC and the introduction of processes that would make the production of chlorine from HCl economic would decimate the traditional production of chlorine from salt. In traditional chlorine production caustic soda, an important industrial chemical, is a co-product. For every mole of chlorine a mole of caustic is produced. Caustic is used in many different applications of which the most important are the chemical processing industry, as a reactant or pH regulator, the pulp and paper industry for dissolving lignin and bleaching, the food industry and in the production of textiles (Kleijn et al., 1993). If the traditional production of chlorine would be decimated because of a ban on PVC

there are two options for the industries that are now using caustic: dramatically reduce the amount of input of caustic by efficiency improvement or substitution or to find alternative routes to produce caustic.

Substitution of caustic is possible in some applications. Alkalic substances like hydrated lime ($Ca(OH)_2$) and soda ash ($NaCO_3$) can be used as alternatives in pH regulation and in the pulp and paper industry, although they have some disadvantages of their own (e..g. lime has a very low solubility in water, less than 1.5 g/l and soda ash, when used in an acidic environment will lead to formation of CO_2 gas). Alternative routes for the production of caustic are rare. One known process is the production from soda ash and hydrated lime ($CaCO_3$):

$$Ca(OH)_2 + Na_2CO_3 \text{ (soda ash)} \rightarrow 2\ NaOH \text{ (caustic soda)} + CaCO_3 \text{ (prec.)}$$

Soda ash can be produced from hydrated lime and common salt (NaCl) via the Solvay process. The
aggregated chemical equation of the Solvay process is:

$$Ca(OH)_2 + 2\ NaCl + CO_2 \rightarrow Na_2CO_3 + CaCl_2 + H_2O$$

Combining these processes, caustic soda can be produced from hydrated lime and common salt. Hydrated lime is produced by adding water to quicklime ($CaO + H_2O \rightarrow Ca(OH)_2$) and quicklime is produced via the calcination of limestone which is used for example in cement kilns ($CaCO_3 + \text{heat} \rightarrow CaO + CO_2$). Caustic soda can thus be produced from limestone and common salt, two minerals of which large reserves exist (Figure 6-6). The mining of these minerals however has important detrimental impacts on the landscape. An interesting point from a climate change perspective is that CO_2 is produced in this process and that the energy need of the calcination process is high (temperatures higher than 500-600 °C are needed). The most commonly used fuel for this process is coal (USGS, 2002), resulting in high CO_2 emissions from the energy use.

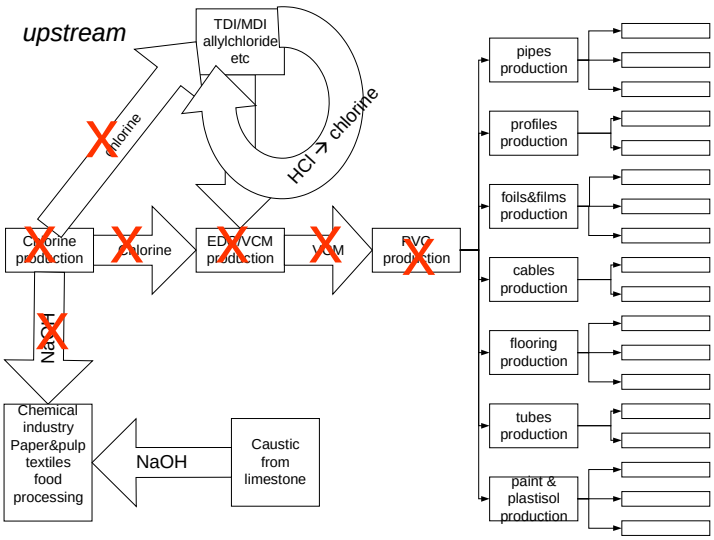

Figure 6-6: If the chlorine production would disappear other production routes for caustic soda would be needed. The most obvious known route would be the production from limestone.

Table 6-2 shows the contribution of lime and cement production as a fraction of the global CO_2 emissions. The production of lime and cement together accounted for a CO_2 emission of more than 9% compared to the CO_2 emissions from fossil fuels. About halve of these emissions come from the chemical process while the other halve comes from the use of fossil fuels in these processes. In Table 6-3 an overview is given of the chemical processes that are used in this alternative route for caustic soda production. For every mole of caustic soda 0.5 mole of CO_2 is released via the chemical process (thus excluding CO_2 from fuels). However, for the production of caustic soda via the electrolysis of common salt energy electricity is needed too, which in turn will lead to CO_2 emissions. In Table 6-4 a comparison is made of the CO_2 emission of the traditional NaCl electrolysis route for the production of NaOH (System 1) and the route via lime (System 2). In this calculation the emissions of CO_2 per kg of NaOH are calculated by adding up the emissions from the production of the different starting materials and the emissions from the chemical process itself (only in System 2). This calculation shows that a transition to the production of caustic soda via limestone will increase the CO_2 emission of caustic production by more than a factor two: for every kg of caustic produced more than a kg of CO_2 *extra* will be emitted. In Table 6-5 the additional CO_2 emission is given when the total world production of caustic would shift from the electrolysis route to the limestone route. It is shown that global CO_2 emissions would increase by around 0.2 % if this transition would take place.

Although one can discuss whether the total chlorine industry would really completely disappear when PVC would be banned and it is questionable that the current caustic soda production capacity would still be needed in such a situation this analysis clearly

shows that a ban on PVC can substantially increase global CO_2 emissions, via an indirect route.

Table 6-2: Contribution of lime and cement production to the total CO_2 production.

year	lime production (10^9 kg)	cement production (10^9 kg)	CO_2 from lime production (10^9 kg C)	CO_2 from cement production (10^9 kg C)	world CO_2 production from fossil fuels (10^9 kg C)	lime CO_2 as % of world total from fossil fuels	cement CO_2 as % of world total from fossil fuels
1963	68	378	29.7	129	2797	1.1	4.6
1964	82	416	35.8	142	2952	1.2	4.8
1965	75	433	32.7	148	3087	1.1	4.8
1966	78	464	34.0	158	3243	1.0	4.9
1967	82	480	35.8	164	3347	1.1	4.9
1968	85	515	37.1	176	3518	1.1	5.0
1969	90	543	39.3	185	3728	1.1	5.0
1970	97	572	42.3	195	3997	1.1	4.9
1971	100	590	43.6	201	4143	1.1	4.9
1972	102	661	44.5	225	4305	1.0	5.2
1973	107	702	46.7	239	4538	1.0	5.3
1974	110	703	48.0	240	4545	1.1	5.3
1975	105	702	45.8	239	4518	1.0	5.3
1976	108	735	47.1	251	4776	1.0	5.2
1977	117	797	51.1	272	4910	1.0	5.5
1978	120	853	52.4	291	4962	1.1	5.9
1979	118	872	51.5	297	5249	1.0	5.7
1980	120	883	52.4	301	5177	1.0	5.8
1981	117	887	51.1	302	5004	1.0	6.0
1982	109	887	47.6	303	4959	1.0	6.1
1983	110	917	48.0	312	4942	1.0	6.3
1984	117	941	51.1	321	5113	1.0	6.3
1985	123	959	53.7	327	5274	1.0	6.2
1986	124	1,008	54.1	344	5436	1.0	6.3
1987	127	1,053	55.4	359	5558	1.0	6.5
1988	134	1,118	58.5	381	5774	1.0	6.6
1989	139	1,042	60.7	355	5879	1.0	6.0
1990	136	1,043	59.3	356	5939	1.0	6.0
1991	133	1,185	58.0	404	6025	1.0	6.7
1992	133	1,123	58.0	383	5922	1.0	6.5
1993	123	1,291	53.7	440	5914	0.9	7.4
1994	118	1,370	51.5	467	6050	0.9	7.7
1995	120	1,445	52.4	493	6182	0.8	8.0
1996	121	1,493	52.8	509	6327	0.8	8.0
1997	118	1,547	51.5	527	6419	0.8	8.2
1998	117	1,547	51.1	527	6401	0.8	8.2
1999	116	1,603	50.6	546	6366	0.8	8.6
2000	118	1,643	51.5	560	6480	0.8	8.6

Source: lime and cement production from USGS online database (http://minerals.usgs.gov/minerals/pubs/commodity/), world CO_2 emission from Worldwatch Insititue (Signposts 2002). CO_2 emission connected to cement production is calculated as follows: per ton CaO 0.85 ton (non-fuel) CO_2 is produced. This 0.85 is the average of the range of 0.79-0.91 that is given by www.ghgprotocol.org. Furthermore, 0.75 ton CO_2 per ton cement is produced from the fossil fuels used in this process (BuildingGreen.com). CO_2 emissions from lime production are calculated as 0.785 ton CO2 per ton CaO (chemical) (Winebrake and Laden, 1998) and 0.75 ton CO_2 per ton CaO from fuels with the assumption that the energy needs are similar to those of cement production.

Table 6-3: Chemical route to produce caustic soda from limestone and common salt

	amount of lime needed to produce caustic
	$Ca(OH)_2 + 2\,NaCl + CO_2 \rightarrow Na_2CO_3 + CaCl_2 + H_2O$
	$Ca(OH)_2 + Na_2CO_3$ (soda ash) $\rightarrow 2\,NaOH$ (caustic soda) $+ CaCO_3$ (prec.)
Sum	$2Ca(OH)_2 + 2\,NaCl + CO_2 \rightarrow 2NaOH + CaCl_2 + CaCO_3 + H_2O$
	$CaCO_3 \rightarrow CaO + CO_2$
	$CaO + H_2O \rightarrow Ca(OH)_2$
Sum	$CaCO_3 + H_2O \rightarrow Ca(OH)_2 + CO_2$
	$2Ca(OH)_2 + 2\,NaCl + CO_2 \rightarrow 2NaOH + CaCl_2 + CaCO_3 + H_2O$
2x	$CaCO_3 + H_2O \rightarrow Ca(OH)_2 + CO_2$
Sum	$\mathbf{CaCO_3 + 2\,NaCl + H_2O \rightarrow 2NaOH + CaCl_2 + CO_2}$
	to produce 2 moles of caustic 1 mole of CO_2 is produced
	to produce 2 moles of caustic 2 moles of lime is needed

Table 6-4: Additional CO_2 emissions when caustic soda would be produced via limestone.

Year	world caustic production (10^9 kg)	lime needed to produce caustic (10^9 kg)	CO_2 from caustic via lime minus electrolysis (10^9 kg C)	world total CO_2 emissions from fossil fuels (10^9 kg C)	additional CO_2 from caustic via limestone as % of world total from fossil fuels)
1995	40.7	60	11.8	6182	0.19
1996	41.1	61	11.9	6327	0.19
1997	43.6	64	12.6	6419	0.20
1998	43.4	64	12.6	6401	0.20
1999	44.4	66	12.9	6366	0.20
2000	45.6	67	13.2	6480	0.20
2001	47.3	70	13.7	6553	0.21

Source: lime production from USGS online databases, world CO_2 emission from Worldwatch Insititue (Signposts 2002). Caustic soda production from CMAI, 2001. Additional CO_2 emissions from production of caustic via lime 0.29 kg C per kg caustic see calculations in Table 6-4.

Table 6-5: Comparison of CO_2 emissions from caustic production via two routes: via electrolysis of common salt or from limestone and common salt

	mole (-)	M (g/mole)	mass (kg)	normalized per kg NaOH	CO_2 emission from the production of starting materials (kg/kg)	kg CO_2 / kg NaOH
System 1: NaOH from electrolysis of NaCl					$2NaCl + 2H_2O \rightarrow 2NaOH + Cl_2 + H_2$	
Inputs						
NaCl	1.00	58.4	0.0584	1.46	0.0940	0.137
H_2O	1.00	18.0	0.0180	0.451		
Outputs						
NaOH	1.00	40.0	0.0400	1.00		
Cl_2	0.50	70.9	0.0355	0.886		
H_2	0.50	2.02	0.0010	0.0252		
Emission of CO_2 from energy use in this process						0.688
Total CO_2 emissions (kg CO_2)						0.825
Total CO_2 emissions (kg C)						0.225
System 2: NaOH from limestone					$CaCO_3 + 2\ NaCl + H_2O \rightarrow 2NaOH + CaCl_2 + CO_2$	
Inputs						
$CaCO_3$	0.50	100	0.0501	1.25	0.00614	0.00768
NaCl	1.00	58.4	0.0584	1.46	0.0940	0.137
H_2O	0.50	18.0	0.0090	0.225		
Outputs						
NaOH	1.00	40.0	0.0400	1.00		
$CaCl_2$	0.50	111	0.0555	1.39		
CO_2	0.50	44.0	0.0220	0.550		0.550
Emission of CO_2 from energy use in this process						1.19
Total CO_2 emissions (kg CO_2)						1.89
Total CO_2 emissions (kg C)						0.515

Source: Emissions from energy use of the electrolysis process (System 1) are taken from ETH LCA database (ETH, 1996), together this is 0.825 kg CO2 per kg NaOH of which 0.137 kg CO2 per kg is related to the production of NaCl. Emissions from the production of the starting materials of the limestone route (Sytem 2) are also taken from the ETH database. The emissions from the chemical process itself are based the fact that for every mole of NaOH one mole of CaO is needed (Table 6-3) and the CO_2 emissions related to this given in the note below Table 6-2.

6.6 Discussion and conclusions

Our hypothesis was that IE tools can be used in addition to IEA tools to identify potential environmental impacts of policy measures aimed not at specific environmental issues, but at materials and products in society. In the example the virtual ban on PVC we show that this hypothesis holds. We also show that this combination of tools can be used to detect and therefore prevent different forms of problem shifting (from PVC related issues to climate change) or in other words to identify co-benefits and co-damages (disappearance of the chlorine industry and increase in lime kiln activities) of environmental policy measures (a ban on PVC).

IEA tools cannot look outside the scope of the specific environmental issues they are made for. Moreover, their resolution in the economic driver modules is too low to enable analysing a quite extensive measure like a complete ban on PVC. This could in part be repaired by increasing the resolution of the economic driver module by distinguishing a higher number of economic sectors. This would indeed constitute to a better picture but there is more to it than that. Not only the resolution, but also the impossibility of detecting indirect effects is a problem. Due to the significant impacts of a ban on PVC on global CO_2 emissions, be it in an indirect manner and via a number of steps, it can be concluded, that the argument that such a measure is too small to be detected is not applicable. IEA tools are not suitable to analyse the effects of measures not affecting their object directly.

Because the resolution of IE tools is much higher for material flows in society they do a little better in this case. Since they look, in different ways, at society's metabolism it is possible to detect changes as a result of a PVC ban. With LCA, a picture emerges of the changes in a wider number of environmental issues as a result of a substitution of PVC with other materials. With SFA, the implications for the chlorine chain become apparent. However, the scope of tools like LCA and SFA is also limited, and their assessment of environmental impact is limited. They show part of what might happen. Also the picture they show remains fragmented and incomplete. Moreover, their analysis of what happens in the environment is limited compared to the outcomes of IEA tools.

IEA tools and IE tools are clearly complementary when looking at their main focus. In our PVC example we have shown that IE tools can indeed provide input for the IEA tools. LCA can provide data on changes in emissions and waste flows resulting from substitution of one product or material to another. SFA can be used to show the connections between different industrial processes. Thus, the combined tools deliver a more complete picture than any of the single tools. How such a combination could be further implemented in practice is a question for further research. For SFA, this may be easier than for LCA. SFA is time and location specific and analyses flows in a geographically demarcated area, just as IEA tools do. SFA can also easily be tailored to the same compounds as the IEA tools. For LCA, a translation step is necessary to make the connection but it could be worthwhile to make the attempt.

However, even a combination of IEA and IE tools is, as can be seen from Section 5, not sufficient to capture all effects. There is a need for a broader systems analysis which can be used for the analysis of what actually can be expected to happen, preceding the selection of the specific tools. The format of the broader systems analysis could range from a material and product flowchart to a true dynamic quantified systems analysis. Only when, on the basis of this analysis, there is an idea of what really happens has the time come to select and apply specific tools - IEA tools, IE tools or a combination of both - to quantify the effects.

References

Albrecht G., Langowski H.-Ch., 1997. Life Cycle Assessment Study on Resilient Floor Coverings. International Journal of LCA 2 (2) 73-80.

Alcamo J., Shaw R., and Hordijk L. (Eds), 1990. The RAINS Model of Acidification. Science and Strategies in Europe. Dordrecht, Netherlands: Kluwer Academic Publishers.

Amann, M, Johansson M., Lükewille A., Schöpp W., Apsimon H., Warren R., Gonzales T., Tarrason L., Tsyro S., 2001. An integrated assessment model for fine particulate matter in Europe. Water, Air and Soil Pollution 130: 223-228

Ayres, R.U., 1997. The Life Cycle of Chlorine: Part I; Chlorine Production & the Chlorine-Mercury Connection, Journal of Industrial Ecology I (1): 81-94.

Allenby, B.R., 1999. Industrial Ecology, Policy Framework and Implementation. Prentice Hall, NJ.

Ayres, R.U. and Ayres L.W., 1997. The Life Cycle of Chlorine: Part II; Conversion Processes & Use in the European Chemical Industry. Journal of Industrial Ecology I (2): 93-115.

Ayres, R.U., 1998. The Life Cycle of Chlorine: Part III: Accounting for Final Use. Journal of Industrial Ecology II (2): 65-89.

Ayres, R.U. and Ayres L.W., 1996. Industrial ecology, Towards Closing the Materials Cycle. Edward Elgar, Cheltenham, UK.

Ayres R.U. and Simonis U. E. (Eds.), 1994. Industrial Metabolism. Restructuring for Sustainable Development, Tokyo: United Nations University Press.

Baccini P., Bader H.-P., 1996. Regionaler Stoffhaushalt, Spektrum Akademischer Verlag, Heidelberg Berlin Oxford.

Baere, de V., Huijbrechts D., Wouters G., 1994. Milieubalans van kortcyclische PVC-verpakkingen, Eindrapport: Tekst / Tabellen en Figuren, VITO, Mol, Belgium.

Beenen, J.H., Eygelaar K.H., 1993. De ecobalans van ringbanden, een eerherstel voor de vinylringband., Kunststof en Rubber, No 1, 10-13.

Bourg, D., Erkman S. (Eds.), 2003. Perspectives on Industrial Ecology. Greenleaf Publishing, Sheffield, UK.

CMAI, 2001. 2001 World Chlor-Alkali Analysis, Volume I&II, Chemical Market Associates, Inc., Houston, Texas, USA.

Commission of The European Communities, 2000. Green Paper, Environmental issues of PVC. COM(2000) 469 final. Commission of The European Communities, Brussels.

Elshkaki, A., van der Voet, E., van Holderbeke M., Timmermans V., 2005. Dynamic stock modelling: A method for the identification and estimation of future waste streams and emissions based on past production and product stock characteristics. Energy 30(8): 1353-1363.

European Parliament, 2001. European Parliament resolution on the Commission Green Paper on environmental issues of PVC (COM(2000) 469-C5-0633/2000.

R. Frischknecht (Ed.), 1996. Okoinventare von Energiesystemen. Grundlagen für den ökologischen Vergleich von Energiesystemen und den Einbezug von Energiesystemen in ökobilanzen für die Schweiz (Life-cycle Inventories of Energy Systems), ETH. Zürich.

Finnveden, G., Gunnar Lindfors, L.-G., Wennberg L., 1996. Alternativa Material till PVC. Inventering och analys av genmförda livscykelanalyser m.m. avseende jämförelser av PVC och alternativa material för olika produktgruppar. (Alternative Materials to PVC. Listing and analysis of LCA's, etc., carried out regarding comparisons of PVC and alternative materials for different product groups.) Institute for Water and Air protection Research (IVL) Report 1232. Stockholm, Sweden.

FKS, Vereniging van Fabrikanten van Kunststof Leidingsystemen, 1995. Rapport milieuprofiel beton, gres en PVC in hoofdriolering (Report Environmental profile of concrete, gres and PVC). FKS, Amsterdam.

Guinée, J.B., Gorrée, M., Heijungs, R., Huppes, G., Kleijn, R., de Koning, A., van Oers, L., Wegener Sleeswijk, A., Suh, S., Udo de Haes, H.A., de Bruijn, H., van Duin, R. , Huijbregts, M.A.J., 2002. *Handbook on Life Cycle Assessment. Operational Guide to the ISO Standards.* Kluwer Academic Publishers, Dordrecht, 692 pp.

Hansen, E. and Lassen C., 2000. Paradigm for Substance Flow Analyses - Guide for SFAs , Report Prepared for the Danish EPA, Copenhagen: the Danish Environmental Protection Agency.

Hauschild, M., Wenzel, H., Alting, L., 1998. Environmental Assessment of Products. Vol. 1. 1998: Chapman and Hall.

Hettelingh, J.P., de Vries, B., Hordijk, L., 2006. Integrated Assessment. In: Boersema, J.J. , Reijnders, L. (Eds.) Principles of Environmental Science. Kluwer Academic Publishers, Dordrecht/Boston MA.

IIASA, 2003. RAINS homepage at IIASA, http://www.iiasa.ac.at/rains/research.html?sb=4, consulted at 7-2-2003.

IMAGE team, 2001. The IMAGE 2.2 implementation of the SRES scenarios: A comprehensive analysis of emissions, climate impacts in the 21st century. RIVM CD-ROM publication 481508018, National Institute for Public Health and the Environment, Bilthoven. The Netherlands, July 2001.

Intron, 1995. Milieuprofiel en milieumaten van een buitenriolering van PVC en gres in vergelijking met beton, rioleringstechniek, Vol.6, No. 2, 483-494.

ISO International Standard 14040, 1997. Environmental management - Life cycle assessment - Principles and framework. International Organisation for Standardisation (ISO). 1997E. Geneva.

Kleijn, R., Huele, R., van der Voet, E., 2000. Dynamic substance flow analysis: the delaying mechanism of stocks, with the case of PVC in Sweden. Ecological Economics 32, 241-254.

Kleijn, R., van der Voet, E., 1998. Chlorine in Western Europe.Materials Accounting as a Tool for Decision Making in Environmental Policy. EC Programme Environment and Climate 1994-1998, ENV4_CT96_0230.

Kleijn R., Tukker, A., van der Voet, E., 1997. Chlorine in the Netherlands: an overview, Journal of Industrial Ecology ,Vol. 1 No. 1, 91-112.

Kleijn, R., van der Voet, E., Udo de Haes, H.A., 1993. Controlling Substance flows: The case of chlorine. Environmental Management, Vol. 18 No. 4, 523-542.

Krähling, H., 1999. Life Cycle Assessments of PVC Products: Green Guides to Ecological Sustainability. In LCA Documents, Vol. 6. Eco-Informa Press, Landsberg, Germany.

Lifset R., Graedel, T.E., 2002. Industrial Ecology: goals and definitions. In: R.U. Ayres L.W. Ayres (eds.) A Handbook of Industrial Ecology. Edward Elgar Cheltenham, UK.

Potting, J., Blok K., 1994. Life-cycle assessment of four types of floor covering, Department of Science, Technology and Society, Utrecht University.

Potting, J., Schöpp, W. , Blok, K. , Hauschild, M., 1998. Site-dependent life-cycle impact assesssment of acidification. Journal of Industrial Ecology. Vol 2 Issue 2, 63-87.

Potting, J.M.B., 2000. Spatial differentiation in life cycle impact assessment : a framework, and site-dependent factors to assess acidification and human exposure. PhD thesis Universiteit Utrecht, Faculteit Scheikunde.

Raadschelders, E., Hettelingh, J.-P. , van der Voet, E., Udo de Haes, H.A., 2003. Side-effects of categorised environmental measures and their implications for impact analysis. Environmental Science and Policy 6, 167 - 174.

Reusser, L., 1998. Life Cycle Assessment of Pipeline systems - A case study on the setting up of the potable water supply and sewege disposal for a detached family house development. Summary report, EMPA: St Gallen, Swiss.

Richter K., Künniger, T., Brunner, K., 1996. Ökologische Bewertung von Fenster-konstruktionen verschiedener Rahmenmaterialien (ohne Verglasung) EMPA Dübendorf, Swiss.

Rotmans, J , Dowlatabadi, H., 1997. Integrated Assessment Modeling, in Human Choice and Climate Change,Vol.3, eds S Rayner and E L Malone, Battle Press, Columbus, OH, 291–377.

Schöpp, W., Amann, M., Cofala, J., Heyes, C., Klimont, Z., 1999. Environmental Modelling & Software, 14(1): 1-9.

Van der Sluijs, J.P., 2002. Integrated Assessment, Definition of. Volume 4 Responding to global environmental change, 249–250. Edited by M. K Tolba in Encyclopedia of Global Environmental Change (ISBN 0-471-97796-9) Editor-in-Chief T. Munn John Wiley & Sons, Ltd, Chichester.

The Overseas Environmental Cooperation Center, 2000. Development of an Integrated Assessment Tool for Acid Deposition in Asia: Training, Model Validation and Upgrading. RAINS-ASIA Phase II. Final report submitted to the World Bank.

Tötsch, W. , Polack, H., 1992. PVC und Ökobilanz. UWSF-Z. Umweltchem. Ökotox. 4 (2).

Trainham, J. A., Law, C. G. , Newman, J. S. , Keating, K. B. , Eames, D. J., 1995. U.S. Patent 5,411,641.

Tukker A., Kleijn, R. , Jasser, A.S., 1997. Material Suppliers and Industrial Metabolism. *Environmental Science and Pollution Research*. Res.4 (2), 113-120.

Tukker, A., Kleijn, R. , van Oers, L., Smeets, E.R.W., 1998. Combining SFA and LCA: The Swedish PVC Analysis. Journal of Industrial Ecology, Volume 1, Issue 4, p. 93-116.

Tukker A., 1999. Frames in the Toxicity Controversy: Based on the Dutch chlorine debate and the Swedish PVC debate. Kluwer Academic Publishers, Dordrecht.

USGS, 2002. USGS Mineral Industry Surveys: Lime in the United States 1950 to 2001.

Verspeek, F.A.B., Kramer, J.E. , van den Hoven, Th.J.J. , Stellard, D.A., 1992. Milieu-effecten van leidingsystemen van asbestcement, PVC, gietijzer, staal en glasvezel versterkte kunststoffen. (Environmental impacts of piping systems of asbestos cement, PVC, cast iron and plastics enforced with glass fiber). KIWA. Nieuwegein, Netherlands.

van der Voet, E., Guinée, J.B., Udo de Haes, H.A. , (Eds.), 2000. Heavy Metals: A Problem Solved? Methods and Models to Evaluate Policy Strategies for Heavy Metals. Kluwer Academic Publishers, ISBN: 0-7923-6192-X.

de Vries, B.J.M., van Vuuren, D.P. , den Elzen, M.G.J. , Janssen, M.A., 2001. The Targets IMage Energy Regional (TIMER) Model. Technical Documentation. RIVM report 461502024 2001. RIVM, Bilthoven, Netherlands.

VROM, 1997. Beleidsstandpunt PVC. Letter from the Minister of Housing, Spatial Planning and the Environment to the Dutch Parliament (ICB97113155), Ministry of VROM,The Hague.

Winebrake J.J., 1998. State Greenhouse Gas Emission Inventory for the Commonwealth of Virginia. James Madison University, Integrated Science and Technology Program, Harrisonburg.

Wrisberg, N., Udo de Haes, H.A., Triebswetter, U., Eder, P., Clift, R., 2002. Analytical Tools for Environmental Design and Management in a Systems Perspective. The Combined Use of Analytical Tools Kluwer Academic Publishers, Dordrecht.