Universiteit Leiden
The Netherlands

Materials and energy flows in industry and ecosystem netwoks : life cycle assessment, input-output analysis, material flow analysis, ecological network flow analysis, and their combinations for industrial ecology

Suh, S.

Citation
Suh, S. (2004). Materials and energy flows in industry and ecosystem netwoks : life cycle assessment, input-output analysis, material flow analysis, ecological network flow analysis, and their combinations for industrial ecology. Retrieved from https://hdl.handle.net/1887/8399

Version:	Not Applicable (or Unknown)
License:	Leiden University Non-exclusive license
Downloaded from:	https://hdl.handle.net/1887/8399

Note: To cite this publication please use the final published version (if applicable).

Materials and energy flows in industry and ecosystem networks

Life Cycle Assessment, Input-Output Analysis, Material Flow Analysis, Ecological Network Flow Analysis, and Their Combinations for Industrial Ecology

---

Proefschrift

ter verkrijging van de graad van Doctor
aan de Rijksuniversiteit te Leiden,
op gezag van de Rector Magnificus Dr. D.D. Breimer,
hoogleraar in de faculteit der Wiskunde en
Natuurwetenschappen en die Geneeskunde,
volgens besluit van het College voor Promoties
te verdedigen op diensdag 15 juni 2004
te klokke 14.15 uur

door

Sangwon Suh

geboren te Seoul
in 1973

Promotiecommissie:

Promotor:	prof. dr. H.A. Udo De Haes
Co-promotor:	dr. G. Huppes
Referent:	prof. dr. F. Duchin (Rensselaer Polytechnic Institute, US)
Overige leden:	prof. dr. F.W. Saris prof. dr. H.S. Overkleeft prof. dr. J.C.J.M. van den Bergh (Vrije Universiteit)

Table of Contents

Proefschrift *i*
Promotiecommissie *ii*
Table of Contents *iii*
Acknowledgement *vii*

I. INTRODUCTION **1**

BACKGROUND 2
1. BRIEF HISTORY ON THE FOUNDATIONS OF NETWORK FLOW ANALYSIS 4
2. QUESTIONS TO BE ANSWERED 8
3. AN OVERVIEW OF CHAPTERS 11
REFERENCES 13

II. SYSTEM BOUNDARY PROBLEM AND THE ISO STANDARDS ON LIFE CYCLE ASSESSMENT **17**

1. INTRODUCTION 18
2. ISO STANDARDS AND SYSTEM BOUNDARY SELECTION 18
3. EXISTING METHODS FOR COMPILING LIFE-CYCLE INVENTORIES 20
4. HYBRID TECHNIQUES FOR LCI 24
5. RELATIONSHIP BETWEEN ISO STANDARDS AND HYBRID ANALYSIS 31
REFERENCES 33

III. FOUNDATIONS OF HYBRID LIFE CYCLE ASSESSMENT **37**

1. INTRODUCTION 38
2. SURVEY OF HYBRID MODELS 39
3. COMPUTATIONAL STRUCTURES OF IOA AND LCA 40
3.1. Input-Output Analysis (IOA) *40*
3.2. Life Cycle Assessment (LCA) *42*
4. IOA AND LCA FOR INTEGRATED HYBRID MODELS 46
5. INTEGRATED HYBRID LCA 52
6. APPLICATION 55
7. CONCLUSIONS AND RECOMMENDATIONS 61
APPENDIX 63
REFERENCES 66

IV. DATABASE BUILDING FOR INPUT-OUTPUT AND HYBRID LIFE CYCLE ASSESSMENT **69**

1. INTRODUCTION 70
2. USE OF IOA TO LCA 71
2.1. Problems of cut-off in LCA *71*
2.2. Input-Output Analysis (IOA) *72*
2.3. Approaches to adopt IOA to LCA *74*
2.4. Problems of applying IOA to LCA *75*
3. METHOD 76
3.1. MIET methodology *76*
3.2. Compilation of environmental data *78*
4. LIMITATIONS OF MIET 81
5. FUTURE OUTLOOK 82
REFERENCES 84

V. AN OVERALL EVALUATION OF LIFE CYCLE INVENTORY APPROACHES 87

1. INTRODUCTION 88
2. METHODS FOR LCI COMPILATION 88
2.1. Process flow diagram *89*
2.2. Matrix representation of product system *91*
2.3. IO-based LCI *94*
2.4. Hybrid analysis *96*
3. COMPARISON BETWEEN METHODS 99
4. ISO COMPLIANCE 104
5. CONCLUSIONS AND DISCUSSION 105
REFERENCES 107

VI. MATERIAL FLOWS IN AN INDUSTRY NETWORK 111

1. INTRODUCTION 112
2. CALCULUS FOR PHYSICAL INPUT-OUTPUT TABLES 112
2.1. Method by Hubacek and Giljum (2003) *112*
2.2. Overall Mass Balance in Hubacek and Giljum (2003) *114*
2.3. A consistent calculus for physical input-output analysis *116*
3. APPLICATION TO LAND APPROPRIATION IN INTERNATIONAL TRADE 119
4. WHICH ONE IS 'CORRECT'? 122
5. CONCLUSIONS 122
REFERENCES 124
APPENDIX 125

VII. MATERIALS AND ENERGY FLOWS IN AN ECOSYSTEM NETWORK 127

1. INTRODUCTION 128
2. THE TRADITION OF MATERIALS AND ENERGY FLOW ANALYSIS IN ECOLOGY 129
2.1. Hannon (1973) *130*

2.2. Finn (1976, 1977) and Patten et al. (1976) *131*
2.3. Szyrmer and Ulanowicz (1987) *133*
2.3. Patten (1982) *134*
3. A GENERALIZED FRAMEWORK FOR MATERIALS AND ENERGY FLOW ANALYSIS 135
4. INTERRELATIONS BETWEEN EXISTING MEFA APPROACHES 140
4.1. A system closed toward primary inputs *140*
4.2. Transitive closure matrices *141*
4.3. Distribution of primary inputs over ecosystem components *144*
4.4. Gross flow and Total flow *147*
4.5. Environ analysis *148*
5. A NUMERICAL EXAMPLE 149
6. DISCUSSION AND CONCLUSIONS 153
APPENDIX A 161
APPENDIX B 162

VIII. AN APPLICATION 167

REFERENCES AND NOTES 179

IX. CONCLUSIONS AND DISCUSSION 181

1. CONCLUSIONS 182
2. RECOMMENDATIONS 183
3. DISCUSSION 184
4. RECENT DEVELOPMENTS 189
REFERENCES 192

PUBLICATIONS IN THIS DISSERTATION 195

SUMMARY 197

SAMENVATTING 203

CURRICULUM VITAE 209

Acknowledgement

I thank my colleagues, Anneke Sleeswijk, Arjan de Koning, Ayman Elshkaki, Ester van der Voet, Igor Nicolic, Jeroen Guinée, Lauran van Oers, René Kleijn, and Ruben Huele at the Institute of Environmental Sciences (CML), who encouraged me and were not stingy in throwing sometimes acidic but always constructive critiques. Special thanks to Reinout Heijungs who inspired me in many ways especially to work on strange formulas. Another special thanks to Esther Philips for her kind supports and friendship: it is unthinkable to finish this thesis without Esther. I thank Edith de Roos for her kind help in getting all the references cited in this thesis.

For the last four years, I had quite some opportunities to actively co-operate with colleagues outside CML as well. Working and discussing with colleagues from variety of institutes has formed an important part my PhD works, and I am thankful for such opportunities. I would like to acknowledge Ignazio Mongelli at Bari, Arpad Horvath at Berkeley, Scott Matthews at CMU, Olivier Jolliet, Yves Loerincik, and Tourane Corbière-Nicollier at EPFL, Gerald Rebitzer at Alcan, Susanne Kytzia at ETHZ, Erik Dietzenbacher, Henk Moll and José Potting at Groningen, Whan-Sam Chung at KAERI, Masanobu Ishikawa at Kobe, Bo Weidema, Kim Christiansen and Pilippa Notten at LCA 2.0, Yuichi Moriguchi at NIES, Edgar Hertwich, Klaus Vogstad and Anders Strømman at NTNU, Manfred Lenzen at Sydney, Masahiko Hirao and Yasuhiro Fukushima at Tokyo, Shinichiro Nakamura and Yasushi Kondo at Waseda for the hospitality, advices and productive co-operation and discussions.

I am thankful to Joram, Yumi, and Yunju for their kind help and friendship right from the beginning of my PhD study in Leiden. My gratitude to family Schweitz for the numerous, happy memories that we share together. I am indebted to Dong Ick You and Family Kang for the advices and supports that helped me a lot in settling in Leiden. The 'weekly meetings' at our Church have been great: I am thankful to Sung-Chul Sohn, Joo-Yeol Lee, Han-Sun Choi, and Sang-Wook Kim, and Jung-Bae Park of Mother of all Saints, Jung-Lan Joo, Kwang-Sun Kim, and Hye-Sun Kim of Mother of Holy Ancestors for their sincere love and care. All the members of the 'Hague-chapter' including Hui-Gun Park, O-Gon Kwon, Bong-Jin Choi, Ji-In Hong, Kwang-Ho Kim and their families are acknowledged for the happiness and delight that they brought to me. Special thanks to my godfather, Sang Jik Rhee, and his family for their thoughtful guidance and care. I thank Jea-Min, Chung-Ho, Ji-Yong, Da-Jung, Dai-Ho, Channi, Sang-Hyuk, Jayeon and their families for granting me the pleasure to help them fulfilling a tiny bit of their myriad curiosity.

I am indebted to Kun Mo Lee at Ajou University for introducing me to this excellent field of research 8 years ago. My former colleagues at Ajou University including Jeasung Noh, Pilju Park, Sang-Yong Lee, Young-Chae Heo, Kwang-Won Lee are also acknowledged. Special thanks to Sansun Ha for his not-so-frequent updates on the issues in Korea and friendship.

There are people who have been waiting for this thesis as much as I have. My deepest gratefulness to my parents for their endless affection and supports in a distance. I thank Eun-Kyong and Min-Jung for the cheers and encouragements. My aunts, uncle and cousins are acknowledged as well. Finally, there must be very few who have been waiting for this thesis more than I have. I know at least some of them. My children, Jungho, Youngju, and yet anonymous the third, and my wife Yunki. I have been and am thankful for their immeasurable love and patience. This thesis is entirely for Yunki.

I. Introduction

Background

Every year around 23 billion barrels of crude oil are extracted, processed, used and disposed of in the form of hundreds of thousands of different compounds (MacKenzie, 2000). The massive amount of global crude oil consumption is equivalent to fill-in over 5 modern Olympic stadiums every day.[1] Fossil fuel resources and other metallic and non-metallic mineral resources have long been formed and accumulated by natural processes in the earth crust on a geological time scale. They are now rapidly reactivated, transformed and redistributed by anthropogenic activities, causing various environmental problems. The unprecedented flow rate of resources from the environment and pollutants to the environment characterises the modern relationship between the environment and our society. The structure of materials and energy flows between and within industries and the environment is thus a key to understanding the current environmental crisis and its possible solutions.

There are a number of approaches that deal with the materials and energy flows in industrial and natural systems including Life Cycle Assessment (LCA), environmental Input-Output Analysis (IOA), and Material Flow Analysis (MFA), Substance Flow Analysis (SFA) (Wrisberg *et al.*, 2002) (Figure 1). LCA is a tool to quantify the environmental impacts of a product throughout its life cycle including raw material extraction, manufacturing, use and disposal (ISO, 1997; Guinée *et al.*, 2002). In LCA studies, the flows of commodities between the industrial processes and the flows of environmental interventions between the industrial processes and the environment are generally represented using a set of linear equations (Heijungs, 1994; Heijungs and Suh, 2002; *cf.* Westerberg *et al.*, 1979). LCA requires a high level of detail for both industrial processes and environmental flows, as the results are normally used for firm-level decision-making as on process modification, selection of raw materials, and product design *etc.* (Figure 1).

IOA is an established economic discipline that concerns primarily the monetary flows between the industries as related to the supply and demand of commodities and capital goods (Miller and Blair, 1985). Almost all countries publish Input-Output Tables (IOTs) as part of their national accounts (UN, 1993). Although its main applications are in economic analysis, IOA has played an important role also in the field of environmental systems analysis and industrial ecology (Ayres and Kneese, 1969; Duchin,

[1] The volume of a modern Olympic stadium like the one in Montreal amounts to nearly 2 million cubic meters, and the 23 billion barrels (that is 3.66 cubic kilometer) of annual crude oil production is equivalent to 10 million cubic meters of crude oil per day. Or, 3.66 km^3 distributed over the 149,000,000 km^2 land area of the earth, is 246 liters per ha, every year again.

1992; Proops *et al.*, 1993; Duchin and Lange, 1995; Duchin and Steenge, 1999). Recently, a number of national and international initiatives have been formed to link environmental statistics with IOTs. The National Accounting Matrix including Environmental Accounts (NAMEA), for instance, is now available for many European countries. It provides basic data for the use of IOA in environmental systems analyses (Keuning *et al.*, 1999), in most countries still referring to a very limited set of substances and emissions only. In terms of the resolution of its industrial system, environmental IOA stands in between the more aggregated macro-level approach such as bulk MFA and more disaggregated micro-level approach such as LCA (Figure 1). An advantage of using IOTs as a basis for the network flow structure is that it embraces the whole national economy whereas LCA studies are generally more confined regarding their system definition.

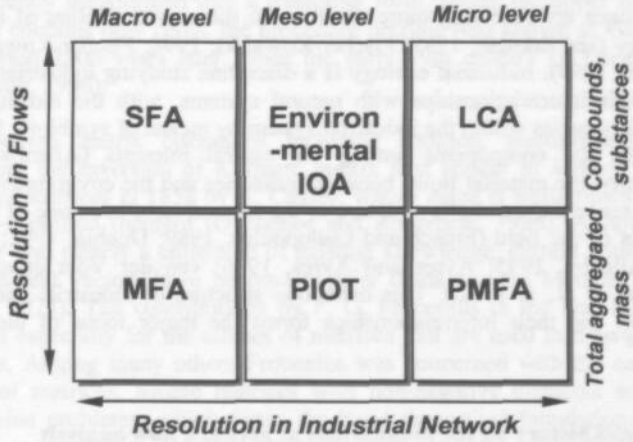

Figure 1. Approaches of quantitative materials and energy flow analysis in industrial network systems.

MFA, in a narrow sense, deals with the flows of resources of a region in an aggregated mass basis (see *eg* Mathews *et al.*, 2000; Udo de Haes and van der Voet, 1997). Such MFA is referred to as a bulk MFA (Kleijn, 2001). Nonetheless, MFA is not necessarily bulk or region based. In some context, analyses on specific compounds or even a substance or on a specific product system can be referred to as MFA (see *eg* Konijn *et al.*, 1997; Kandelaars and van den Bergh, 1998; Williams *et al.*, 2002). MFA with a high resolution of flows, at the substance level, is named Substance Flow Analysis (SFA) here (van der Voet, 1996). The use of Physical Input-Output Tables (PIOT) is another form of performing an MFA study that is more aggregated than

Process-level Material Flow Analysis (PMFA) but is more disaggregated than a regional level MFA (Figure 1). A PIOT describes the relationship between industries like a monetary IOT does but in physical units (see *eg* Stahmer *et al.*, 2003; Hubacek and Giljum, 2003).

In ecology, the flows of energy and nutrients between ecosystem components have been among the central interests of ecologists since early 1920s (Lokta, 1925; Lindeman, 1942). The structure of network flow analysis in ecology was originally brought in from economic IOA in the 1970s (Hannon, 1973; Patten *et al.*, 1976) but it has evolved in its own way for the last three decades. Currently the world largest food web databases are structured based on such developments (Szyrmer and Ulanowicz, 1987; Christensen and Pauly, 1992).

Such network flow analyses as have been proposed and used by various disciplines are receiving more attention in the new discipline of industrial ecology (see Erkman, 1997; Fischer-Kowalski, 1998; Fischer-Kowalski and Hüttler, 1999). Industrial ecology is a discipline studying industrial systems and their interrelationships with natural systems, with the closing of the materials cycles within the industrial system by means of symbiotic functions between the components among the central interests (Allenby, 1999). Naturally, the material flows between industries and the environment, which characterise the metabolic structure of the system, have been one of the main focuses of the field (Frosch and Gallopoulos, 1989; Duchin, 1992; Graedel and Allenby, 1995; Ayres and Ayres, 1996; van der Voet *et al.*, 2000, Graedel *et al.*, *in press*). This metabolic structure of industrial and natural systems and their interrelationships forms the major focus of the current study.[2]

1. Brief history on the foundations of network flow analysis

A quantitative analysis of materials and energy flows in a network system or, in short, network flow analysis has long been a scientific interest notably in economics, mathematics, biology, ecology, and chemistry. Such an analysis requires basic mathematical knowledge, a methodological basis and the data to execute the analysis. This is a brief review of the history and the roots of such developments as are relevant to the current work, first focusing on mathematical foundations and next on empirical applications in economic and ecological analysis.

---

[2] The term *metabolism* originated from biology. In biology metabolism is defined as "an exchange of energy and substances between organisms and the environment" (Moleschott, 1857 *op. cit.* Fischer-Kowalski, 1998).

Mathematical foundations of network flow analysis

Historically, mathematics has served not only as a means of computation but also as an intellectual basis needed to develop both thought and practical applications in science, technology and administration. In network flow analysis, especially linear algebra and the use of matrices and vectors, enabled compact notations and enormously increased computational power. The first use of matrices goes back to more than 2000 years ago in China (Martzloff and Wilson, 1997). The Chinese classic, *Chu Chang Suan Shu* (九章算術), which literally means 'Nine chapters of computational skills', first appeared at the start of the Han dynasty, between 200 BC and 100 BC, but very probably contains older material. The eighth chapter of *Chu Chang* is *Fang Cheng* (方程) meaning a rectangle or square, describes the solution of simultaneous linear equations using only their coefficients put into a rectangle. Those coefficients, already including negative ones, are subsequently transformed into a triangular form, where the upper or lower triangle contains only zeros, the procedure become best known as Gaussian-elimination 2000 years later, since the early 19th century (O'Connor and Robertson, 1996).

The modern matrix operations including addition, multiplication, and especially the inversion of a square matrix first appear in *Memoir on the theory of matrices* in 1858 by A. Cayley, whose name is well-known for the Cayley-Hamilton theorem (O'Connor and Robertson, 1996). Although the Memoir was merely a collection of existing knowledge, current notations of matrices and vectors have become popular thanks to the Memoir as well (Kline, 1972). The contributions by F. G. Frobenius in the late 1800s are relevant especially for the classes of matrices that are used in network flow analysis. Among many others Frobenius was concerned with the canonical forms of matrices, square matrices with non-negative elements and their eigenvalue problems, which forms the basic theoretical foundations of the matrix computations for the linear network systems. The findings by Frobenius can be utilised for *eg* deriving convergence conditions and non-negativity conditions of network systems (Hawkins and Simon, 1949; Solow, 1952; Fiedler and Pták, 1962; Takayama, 1985; Suh, 2001; Suh and Heijungs, 2001).

The metabolic structure of an economy

At the beginning of his well known work in 1936, W. Leontief defined his attempt as a "*Tableau Economique*" of the U.S. (Leontief, 1936). The *Tableau Economique* by Quesnay describes the flow of money and commodities between the three classes of citizens, namely proprietary class (landlords), productive class (farmers), and sterile class (artisans and merchants) (Quesnay, 1758). Almost a decade later he published an article in *Journal de l'agriculture, du commerce et des finances*, which lays out the

fundamentals of what is now called national accounts (Quesnay, 1766). In the article, he quantified the flows of capital, commodity, income and expenditure between the three classes of citizens, as sectors, and the arithmetic principles to calculate them (Brems, 1986). The *Tableau Economique* deserves a credit as the first quantitative description of an economic network system with regard to money flows (Studenski, 1958).

Input-Output accounts, a modern version of *Tableau Economique*, is developed based upon a life-long dedication by W. Leontief, a Nobel laureate for this achievements. His early ideas on inter-industry analysis go back to the 1920s. He clearly noticed the limitations of partial analysis of economics in understanding the fundamental structure of an economy and tried to develop a systems view on a broader statistical basis (see Suh, 2004). His, and also the world's, first large-scale empirical Input-Output study was published in 1936 (Leontief, 1936). The original formulation of the IO problem by Leontief concerns the relationships between industries. The industry-by-industry framework of Leontief has been improved using so-called, 'Supply and Use framework', which basically consists of commodity-by-industry accounts, and, in combination, enables commodity-by-commodity accounts (Stone *et al.*, 1963; UN, 1968; UN, 1993). The current Systems of National Accounts (SNA) is based on the Supply and Use framework.

Another contribution from W. Leontief that is relevant in the context of the current study is his work in 1970s on the generation and abatement of pollutants by industrial processes (Leontief, 1970). Four years after his publication, Leontief faced a criticism as the matrix used does not posses the general properties that IO matrices usually have (Flick, 1974; Leontief, 1974; Lee, 1983). However, the general framework itself is relevant and can be applied to a system where the generation of pollutants or wastes and their abatements are of interest (see *eg* Nakamura and Kondo, 2002).

In the late 1960s and early 1970s, this field was filled with genuinely new ideas. Ayres and Kneese (1969), applied the physical mass-balance principle to the basic structure of IOA, enabling a quantitative analysis of material flows in an economic system. The contribution by Ayres and Kneese is considered as the first attempt of describing the metabolic structure of an economy by means of physical flows. Since the 1990s, PIOTs started to be compiled in a number of countries (Kratterl and Kratena, 1990; Kratena *et al*, 1992; Pedersen, 1999; Stahmer *et al.*, 2003; *cf.* Hoekstra, 2003).

Isard (1968) and Daly (1968) constructed a *Tableau Economique* of the ecosystem and linked it with economic IOA, resulting in an ecological-economic network system. Victor (1972) proposed to use the commodity-by-industry framework for the economic system and to link it with the natural

system through the exchange of ecological commodities and wastes. Energy research started to flourish in the 1970s as well. The oil shock induced extensive research on the structure of energy use, and various studies on energy terms of products were conducted (Chapman, 1974; Berry and Fels, 1973). Wright (1974) utilised IOA for energy analysis, which, till then, was dominated by process-based analysis (see also Bullard and Herendeen, 1975; Hannon, 1974; Bullard *et al.*, 1978). The two schools of energy analysis, namely process analysis and Input-Output energy analysis, were merged by Bullard and Pillarti (1976). They linked the Input-Output based energy analysis with process based analysis, thus building hybrid energy analysis (see also van Engelenburg, 1994; Wilting, 1996, *cf* Moriguchi *et al.*, 1993).

It was Heijungs (1994) who first introduced a consistent mathematical structure based on matrix algebra to LCA. The system that Heijungs (1994) developed is a set of processes in a life-cycle of a product connected primarily with flows of commodities. But it was not only that: some of the flows described, such as 'hour of listening to the radio', are not something traditionally called commodities (Heijungs, 1997). The methodology by Heijungs (1994) has been and is being adopted by major LCA databases and software tools.

Developments of Ecological Network Analysis

Ecologists have long been interested in the flows of nutrients and energy between ecosystem components. It was Hannon (1973) who first introduced the economic IOA methodology to ecosystem network flow analysis. The start by Hannon was followed by a series of studies including Finn (1976), Patten *et al.* (1976), and Szyrmer and Ulanowicz (1987). Finn (1976) developed a set of analytical measures to characterise the structure of an ecosystem using a rather extensive reformulation of the approach proposed by Hannon (1973), successfully demonstrating how some key properties of a complex network system could be extracted (Finn, 1976). Finn's Cycling Index (FCI), for instance, is still one of the most frequently applied indicators in ecological network analyses. The contributions by Finn (1976) have led the materials and energy flow analysis framework to be more widely utilised in general ecological applications (Szyrmer and Ulanowicz, 1987; Baird and Ulanowicz, 1989; Baird *et al.*, 1991; Pauly and Christensen, 1995; Heymans and McLachlan, 1996; Vasconcellos *et al.*, 1997). For instance, Baird *et al.* (1991) evaluated E.P. Odum's definition of ecosystem maturity using FCI. The analysis of six marine ecosystems by Baird *et al.* (1991) showed that FCI and system maturity were inversely correlated. The result was generally confirmed by Vasconcellos *et al.* (1997) on 18 marine trophic models.

Another important development in the materials and energy flow analysis tradition in ecology is *environ* analysis. Patten (1982) proposed the term

environ to refer to the relative interdependency between ecosystem components in terms of nutrient or energy flows. Results of environ analysis are generally presented as a comprehensive network flow diagram, which shows the relative magnitudes of materials or energy flows between the ecosystem components through direct and indirect relationships (Levine, 1980; Patten, 1982; Patten *et al.*, 1990). Ulanowicz and colleagues have broadened the application of materials and energy flow analysis both theoretically and empirically. A comprehensive study on Chesapeake Bay by Baird and Ulanowicz (1987) found that the extended diets of bluefish and striped bass they calculated showed considerable differences, although, as both are pelagic piscivores, differences in their direct diets would not be expected. The finding helped to explain why the concentration of the pesticide Kepone detected in the flesh of bluefish was much higher than that in striped bass.

2. Questions to be answered

The central research question of the current work is:

What may be the common architecture for network flow analysis in industrial ecology, and how to utilise it for specific applications?

There are three underlying themes, related to modelling choices, models architecture, and model implementation.

Theme 1. Modelling Choices in Analysing Materials and Energy Flow Networks

In modelling there often are conflicting demands, difficult to be all satisfied at the same time. In LCA for instance, a high level of process detail is generally required and, at the same time, the system definition needs to be broad enough not to omit relevant processes. In practice, however, given the finite time and resources, one either has to confine the system with a high level of detail for the processes included or *vise versa*. Generally, mainstream LCA practitioners choose the high resolution sacrificing the system completeness side. By basing an LCA study on a confined system definition, whether the two product systems to be compared are embedded in a equivalent system boundary or not, cannot be objectively defined. This has been a serious problem that limits the applicability of LCA in comparing two product systems, especially if these differ in their central components (see *eg* Hocking, 1991; Anonymous, 1991; Lave *et al*, 1995). On the other hand, more encompassing tools, such as economic IOA, provides only aggregated

results that are not always relevant in LCA context, lacking the technological specificity of the choices at hand. A solution that has been used since the 1970s in the field of energy analysis was a hybrid approach, where process analysis results in the foreground system are added to Input-Output energy analysis results representing the background system. However, in these studies, the hybrid analysis employs different computational structures for the two systems. They are not combined into one integrated framework, thus limiting the applicability of analytical algorithms as have been developed for both LCA and IOA. This problem has led to a main methodological question,

> Question 1.1. "*How to systematically broaden the system in LCA without loss of resolution?*".

There are a number of different computational approaches in LCA, which, being implemented in different software packages, are also used in practice. Each approach has its own advantages and limitations, and, given the practical constraints of an LCA study, such as time and resources, it is important to guide LCA practitioners to the efficient use of available resources for reaching the envisaged goal of the study. This has led to a next question,

> Question 1.2. "*What are the available approaches in LCA computation, and what can be best approaches for different types of application?*"

As discussed before, a line of development in the field of MFA is PIOT. In using PIOT, the treatment of waste flows evoked important theoretical discussions. In economic IOTs, wastes generally are not visible, unless they involve monetary transactions. However, in PIOTs waste flows emerge to the surface, as they are treated on a mass basis, regardless of monetary transactions. Depending on the way how the wastes are considered, the results of a PIOT may significantly vary. This problem leads to a next question,

> Question 1.3. "*Are there consistent approaches of treating wastes in PIOT? If so, which one is the most desirable?*"

Theme 2. A Common Architecture of Materials and Energy Flow Network Analysis

In the course of deepening and widening the body of knowledge of one discipline, communication with different disciplines often becomes problematic. As noted before, network flow analysis is widely in use in many disciplines, including economic IOA, LCA, MFA and ecology. Although the network flow models in these disciplines are remarkably similar, a good communication between them, which surely would be beneficial for all, is

almost non existing. Furthermore, as the network flow analysis has a long history, while environmental issues have been raised more recently, there are considerable number of proposals within academic domains that are not genuinely new or better as compared to what has been existing for decades in other disciplines. The current lack of adequate communication and inter-system comparison leads to a next two questions.

> Question 2.1. "*Is there a common architecture in materials and energy flow network analysis in economics, LCA, MFA and ecology?*"

> Question 2.2. "*If so, can these be used to gain insights by eg, inter-system comparisons or hybridisation?*"

Theme 3. Model Implementation

Network flow analysis is a powerful tool in revealing the structure of a system. The network flow analysis framework itself is relatively neutral and can be applied for answering very different questions. However, when it comes to actual implementation of network flow analysis, one faces the problem of data. For instance, the reason why many LCA practitioners are not able to use IOA in hybrid LCA is almost entirely due to the lack of data. Especially, compiling data on hundreds of environmental interventions at the high level of sectoral detail, as needed for hybrid LCA applications, requires considerable efforts. Although there are a number of national and international initiatives established including NAMEA and Pollutant Release and Transfer Registers (PRTR), this subject receives relatively limited interest both in the scientific and in the administrative and public policy community (Keuning *et al.*, 1999; Sully and Hill, 2003; Nansai *et al.*, 2002). Building a quality database for the broader use in industrial ecology seems, however, one of the top priorities not only for hybrid LCA but also for broader applications of environmental IOA. This leads to the question:

> Question 3.1. "*Where are the data sources, and how to build a large scale environmental database for the use in LCA, IOA, hybrid LCA, MFA, and broader industrial ecology applications?*"

LCA is among the few highly institutionalised environmental analysis tools. The International Organization for Standardization (ISO) has published a series of international standards on LCA since 1998, and these are reflected in a national institutional context. Among others, ISO 14040, ISO 14041, and ISO 14049 contain parts on how to model the flows between industrial processes in a product system (ISO, 1997; ISO, 1998; ISO, 2000). It is a practical and important issue to know for LCA users whether hybrid LCA is in compliance with corresponding ISO standards. If a hybrid method is not in

compliance with ISO standards, although its utility can be proven, relevant amendments of ISO standards would be due. This leads to a further question:

> Question 3.2. "*Is hybrid LCA in compliance with ISO standards on LCA? If not, what would be useful amendments on the current ISO standards on LCA*"

The analytical power of a network flow analysis enables answering various questions related to the structure of a system. Analysing the implications of the shift towards a service-oriented economy is an example. The high level of consumption by wealthy nations and its impact on the global environment have led to a series of scientific and ethical discussions (see *eg*, Myer, 1997; Vincent and Panayotou, 1997). With some, there is a strong optimism in that becoming rich, and thus consuming more, is a way to solve the environmental problem (*eg* Beckerman, 1992). This optimistic view assumes that, as economy grows, people tend to consume less-material-intensive services instead of material-intensive manufacturing products (Beckerman, 1992; Panayotou, 2003). Although services are assumed to be less-material intensive, they are connected with materials-producing industries though supply-chain networks. This issue leads to the following question:

> Question 3.3. "*Can moving towards a services-oriented economy cure our environmental problems, including those of climate change?*"

These three sets of related questions form the underlying motivation for the current book and are reflected in each chapter.

3. An overview of chapters

The chapters in the current book are primarily about LCA (Chapters II–V), MFA (Chapter VI), ecological network flow analysis (Chapter VII) and an application (Chapter VIII). All chapters, except for the current and the final chapter, have been published, are in press, or have been submitted for publication in a scientific journal.

Chapter II (corresponding to the questions 1.1, 3.1, and 3.2) is about system boundary issues in LCA in relation to ISO standards on LCA. Current ISO standards on LCA are analysed and different ways to help solve the system boundary problem in LCA are proposed. Available data sources and the current state of practice in different countries are also discussed.

Chapter III (corresponding to the questions 1.1, 2.1, and 2.2) presents the methodological foundations of hybrid LCA. The mathematical structure of IOA and LCA is analysed and inter-linked into a consistent integrated

framework. A numerical example is presented with an analytical algorithm.

Chapter IV (corresponding to the questions 1.1 and 3.1) presents the data sources and a number of methodological issues in constructing a environmental Input-Output database for the use in hybrid LCA. The database, which is now updated, contains data on over 1,000 environmental interventions by 480 commodities produced in the U.S.

Chapter V (corresponding to the questions 1.2 and 3.2) reviews available approaches for Life Cycle Inventory (LCI) computation. They are evaluated on the basis of methodological soundness and practical constraints such as available time and resources.

Chapter VI (corresponding to the questions 1.3 and 2.1) discusses a set of consistent approaches to deal with wastes in PIOTs, converging into one general applicable method. This approach is applied to the subject of land appropriation by international trade, using numerical examples from an existing study.

Chapter VII (corresponding to the questions 2.1 and 2.2) analyses a number of approaches for ecological network flow analysis and compares these approaches within themselves and with IOA. A generalised framework that embraces those approaches in both ecology and IOA is proposed and applied to a numerical example.

Chapter VIII (corresponding to the question 3.1) analyses the structure of underlying processes of 21 Greenhouse Gas (GHG) emissions in the U.S. focusing on the implications of a shift towards a service-oriented economy. GHG emission intensities of 480 products and services are calculated with and without taking the supply-chain into account.

Chapter IX surveys the main findings of the analysis and presents a number of on-going discussions and recommendations.

References

_____, 1991: Letters, *Science*, 252, 1361-1363

Ayres R.U., Kneese A.V., 1969: Production, Consumption and Externalities, *American Economic Review*. LIX, 282-97.

Ayres, R.U., Ayres, L.W., 1996: *Industrial Ecology: Towards Closing the Materials Cycle*. Edward Elgar Publishing, Cheltenham, UK.

Baird, D., Ulanowicz, R.E., 1989: The Seasonal Dynamics of the Chesapeake Bay Ecosystem. *Ecological Monographs*, 59, 329-364.

Baird, D., Mcglade, J.M., Ulanowicz, R.E., 1991: The Comparative Ecology of 6 Marine Ecosystems. *Philosophical Transactions of the Royal Society of London Series B-Biological Sciences*, 333, 15-29.

Beckerman, W., 1992: Economic Growth and the Environment: Whose Growth? Whose Environment? *World Development* 20, 481-496.

Berry, R.S., Fels, M.F., 1973: The energy cost of automobiles, Science and public affairs - *Bulletin of the Atomic Scientists*, 10, 11-17, 58-60.

de Bruijn, S.M., J.C.J.M. van den Bergh. J.B. Opschoor, 1998: Economic growth and emissions: reconsidering the empirical basis of environmental Kuznets curves. *Ecological Economics* 25, 161-175.

Bullard, C.W., Herendeen, R.A. 1975: The energy cost of goods and services. *Energy Policy*, 3, 484-493.

Bullard, C.W., Penner, P.S., Pilati, D.A. 1978: Net energy analysis: Handbook for combining process and input-output analysis. *Resources and Energy*, 1 (3), 267-313.

Bullard, C.W., Pilati, D.A. 1976: *Reducing uncertainty in energy analysis*. CAC-doc. no. 205, Center for Advanced Computation, University of Illinois, Urbana, USA.

Chapman, P.F. 1974: The energy costs of producing copper and aluminium from primary sources, *Metals and materials*, 8 (2), 107-111.

Christensen, V. and Pauly, D., 1992: ECOPATH II - a software for balancing steady-state ecosystem models and calculating network characteristics. *Ecological Modelling*, 61, 169 – 185.

Daly, H.E. 1968: On Economics as a Life Science, *Journal of Political Economy*. 76, 392-406.

Duchin, F., 1992: Industrial Input-Output Analysis: Implications for Industrial Ecology. *Proceedings of the National Academy of Sciences*, 89, 851-855.

Duchin, F., Lange, G.-M., 1995: *The Future of the Environment: Ecological Economics & Technological Change*, Oxford University Press, New York, USA.

Duchin, F., Steenge, A., 1999: *Input-output analysis, technology and the environment*, in J. van den Bergh (ed.), *Handbook of Environmental and Resource Economics*, Edward Elgar, Cheltenham, UK, p. 1037-1059.

van Engelenburg, B.C.W., T.F.M. van Rossum, K. Blok, K. Vringer, 1994: Calculating the energy requirements of household purchases: a practical step by step method, *Energy Policy*, 22, 648-656.

Erkman, S., 1997: Industrial Ecology: An Historical View. *Journal of Cleaner Production* 5 (1-2): 1-10.

Fiedler, M., Pták, V., 1962: On matrices with non-positive off-diagonal elements and positive principal minors, *Czechoslovak Mathematics Journal*, 12 (87), 382-400.

Finn, J.T., 1976: Measures of Ecosystem Structure and Function Derived from Analysis of Flows. *Journal of Theoretical Biology*, 56, 363-380.

Fischer-Kowalski, M., 1998: Society's Metabolism. The Intellectual History of Material Flow Analysis, Part I, 1860 – 1970. *Journal of Industrial Ecology*, 2 (1), 61-78.

Fischer-Kowalski, M., Hüttler, W. 1999: Society's Metabolism: The State of the Art. The Intellectual History of Material Flow Analysis, Part II: 1970-1998. *Journal of Industrial Ecology*, 2 (4), 107-137.

Flick, W.A, 1974: Environmental Repercussions and the Economic Structure: An Input-Output Approach: A Comment. *The Review of Economics and Statistics*, 56 (1), 107-109.

Graedel, T. and Allenby, B., 1995. *Industrial Ecology*. Prentice Hall., Englewood Cliffs, New

Jersey.
Graedel, T.E. D. van Beers, M. Bertram, K. Fuse, R.B. Gordon, A. Gritsinin, A. Kapur, R.J. Klee, R.J. Lifset, L. Memon, H. Rechberger, S. Spatari, D. Vexler, *in press*: Multilevel Cycle of Anthropogenic Copper, *Environmental Science and Technology*.
Guinée, J.B., M. Gorrée, R. Heijungs , G. Huppes, R. Kleijn, A. de Koning, L. van Oers, A. Wegener Sleeswijk, S. Suh, H.A. Udo de Haes, H. de Bruijn, R. van Duin, M.A.J. Huijbregts, 2002: Handbook on Life Cycle Assessment. Operational Guide to the ISO Standards. Kluwer Academic Publishers, Dordrecht, The Netherlands.
Frosch, R.A., Gallopoulos, N.E., 1989: Strategies For Manufacturing. *Scientific American*, 189, 144-152.
Hannon,B., 1973. Structure of Ecosystems. *Journal of Theoretical Biology*, 41, 535-546.
Hannon, B. 1974: Options for energy conservation, *Technology Review*, 2, 24-31.
Hawkins, D., Simon, H.A., 1949: Some conditions of Macro-economic Stability. *Econometrica*, (July-October), 245-248.
Heijungs, R., 1994: A generic method for the identification of options for cleaner products. *Ecological Economics* 10, 69-81.
Heijungs, R. 1997: *Economic drama and the environmental stage. Derivation of formal tools for environmental analysis and decision-support from a unified epistemological principle*. PhD thesis, Leiden University, Leiden, The Netherlands (Republished as Heijungs, R. A theory of the environment and economic systems. A unified framework for ecological economic analysis and decision-support. Edward Elgar, Cheltenham, 2001).
Heijungs, R., Suh, S., 2002: *The computational structure of life cycle assessment*, Kluwer Academic Publisher, Dordrecht, The Netherlands.
Heymans, J.J., McLachlan, A., 1996: Carbon budget and network analysis of a high-energy beach/surf-zone ecosystem. *Estuarine Coastal and Shelf Science*, 43, 485-505.
Hocking M.B., 1991: Paper versus Polystyrene: A Complex Choice. *Science*. 251, 504-505.
Hoekstra, R., 2003: *Structural Change of the Physical Economy. Decomposition Analysis of Physical and Hybrid-Unit*, PhD Dissertation, Free University, Amsterdam, The Netherlands.
Hubacek, K., Giljum, S., 2003: Applying physical input-output analysis to estimate land appropriation (ecological footprints) of international trade activities. Ecological Economics, 44, 137 – 151.
International Organization for Standardization (ISO), 1997: *Environmental management – life cycle assessment – Principles and framework*. ISO, Geneva, Switzerland.
International Organization for Standardization (ISO) 1998: *International Standard 14041: Environmental management - Life cycle assessment - goal and scope definition and inventory analysis*. ISO, Geneva, Switzerland.
International Organization for Standardization (ISO) 2000: *International Standard ISO/TR 14049: Environmental management - Life cycle assessment - Examples of application of ISO 14041 to goal and scope definition and inventory analysis*. ISO, Geneva, Switzerland.
Isard, W., (1968). Some notes on the linkage of the ecologic and economic systems. *Regional Science Association*, XXII, Budapest, 85-96.
Kandelaars P.P.A.A.H., van den Bergh, J.C.J.M., 1997: Materials-product chain analysis of window frames, *Ecological Economics*, 22, 41-61.
Keuning, S., J. van Dalen, M. de Haan, 1999: The Netherlands' NAMEA: presentation, usage and future extensions. *Structural Change and Economic Dynamics* 10 (1), 15-37.
Kleijn, R. 2001: Adding It All Up. The Sense and Non-Sense of Bulk-MFA. *Journal of Industrial Ecology* 4 (2), 7-8.
Kline, M., 1972: *Mathematical thoughts from ancient to modern times*. Vol. 2. Oxford University Press, Oxford, UK.
Kratena, K., Chovanec, A., and Konechy, R., 1992: *Eine ökolgische volkswirtschaftliche Gesammtrechnung für Österreich*. Die Umwelt Input Output Tabelle 1983. Wien, Austria.
Kratterl, A., Kratena, K., 1990: *Reale Input-Output Tabelle und ökologischer Kreislauf*. Physica-Verlag, Heidelberg, Germany.
Konijn, P., de Boer, S., van Dalen, J. 1997: Input-output analysis of material flows with applications to iron, steel and zinc. *Structural Change and Economic Dynamics* 8 (1), 129-153.

Lave, L., E. Cobas-Flores, C. Hendrickson, F. McMichael, 1995: Using input-output analysis to estimate economy wide discharges. *Environmental Science & Technology*, 29 (9), 420-426.

Lee, K.-S., 1982: A Generalized Input-Output Model of an Economy with Environmental Protection. *Review of Economics and Statistics*, 64 (3), 466-73.

Leontief, W., 1936: Quantitative Input and Output Relations in the Economic System of the United States, Review of Economic Statistics, XVIII (3), 105 – 25.

Leontief, W.W., 1970: Environmental repercussions and the economic structure: An input-output approach. *Review of Economics and Statistics*, LII(3), 261-71.

Leontief, W., 1974: Environmental Repercussions and the Economic Structure: An Input-Output Approach: A Reply. *Review of Economics and Statistics*, 56 (1), 109-110.

Levine, S., 1980: Several Measures of Trophic Structure Applicable to Complex Food Webs. *Journal of Theoretical Biology*, 83, 195-207.

Lindeman, R.L., 1942: The trophic-dynamic aspect of ecology. *Ecology*, 23, 339-418.

Lotka, A.J., 1925: Elements of physical biology. Williams and Wilkins, Baltimore, USA.

MacKenzie, J.J. 2000: *Oil as a finite resource: When is global production likely to peak?* World Resource Institute (WRI), Washington, DC., USA.

Martzloff, J.-C. Wilson, S.S., 1997: A history of Chinese mathematics, Springer, Berlin-Heidelberg, Germany.

Mathews, E., C. Amann, M. Fischer-Kowalski, S. Bringezu, W. Hüttler, R. Kleijn, Y. Moriguchi, C. Ottke, E. Rodenburg, D. Rogich, H. Schandl, H. Schütz, E. van der Voet, H. Weisz, 2000: The Weight of Nations: Material Outflows from Industrial Economies. World Resources Institute (WRI), Washington DC. USA.

Miller, R., Blair, P., 1985: *Input-Output Analysis: Foundations and Extensions*, Prentice-Hall, Englewood Cliffs, NJ, USA.

Moleschott, J. 1857: *Der kreislauf des Lebens*. (*The cyclical nature of life)* Von Zabern, Mainz, Germany.

Moriguchi Y, Y Kondo, H Shimizu, 1993: Analyzing the life cycle impact of cars: the case of CO_2. *Industry and Environment*, 16 (1-2), 42-45.

Myers, N., 1997: Consumption: Challenge to Sustainable Development, *Science* 276, 53-55.

Nakamura, S., Y. Kondo, 2002: Input-Output Analysis of Waste Management. *Journal of Industrial Ecology*, 6 (1), 39 – 63.

Nansai, K., Y. Moriguchi, S. Thohno, Embodied Energy and Emission Intensity Data for Japan Using Input-Output Tables (3EID) – Inventory data for LCA, Center for Global Environmental Research, National Institute for Environemtnal Studies, Tsukuba, Japan.

O'Connor, J.J., Robertson, E.F. 1996: *History of Mathematics: Matrices and determinants*, University of St Andews, Scottland, (available at www-maths.mcs.st-andrews.ac.uk).

Panayotou, T., 2003: *Economic growth and the environment*, Seminar material, United Nations Economic Commission for Europe, Geneva.

Patten, B.C., 1982. Environs - Relativistic Elementary-Particles for Ecology. *American Naturalist*, 119:179-219.

Patten, B.C., 1990: Environ Theory and Indirect Effects - Reply. *Ecology*, 71, 2386-2393.

Patten, B.C., Bosserman, R.W., Finn, J.T., and Cale, W.G., 1976: *Propagation of cause in ecosystems*. In: B.C.Patten (*ed.*), *Systems Analysis and Simulation in Ecology*. Academic Press, New York.

Pauly, D., Christensen, V., 1995: Primary Production Required to Sustain Global Fisheries. *Nature*, 374, 255-257.

Pedersen, O.G. 1999: *Physical Input-Output Tables for Denmark. Products and Materials 1990*, Air Emissions 1990-92. Statistics Denmark, Copenhagen, Denmark.

Proops, J., M. Faber and G. Wagenhals, 1993: *Reducing CO_2 emissions – A comparative input-output-study for Germany and the UK*, Springer-Verlag, London, UK.

Quesnay, F., 1758: *Tableau Economique* (reproduced and translated in Kuczynski, M., Meek, R.L., 1972: *Quesnay's Tableau Economique*. Macmillan, London, UK.).

Quesnay, F., 1766: Analyse de la formule arithmétique du Tableau Economique de la distribution des dépenses annuelles d'une Nation agricole, *Journal de l'agriculture, du commerce et des finances*, (Reprint in H. Brems, 1986, *Pioneering Economic Theory, 1630-1980*, Baltimore: Johns Hopkins University Press, USA.).

Solow, R. 1952: On the Structure of Linear Models. *Econometrica*, 20 (January), 29-46.
Stahmer, C., M. Kuhn, N. Braun, 2003: *Physische Input-Output Tabellen, Beiträge zu den Umweltökonomischen Gesamtrechnungen*. Metzler-Poeschel Verlag, Stuttgart, Germany.
Stone, R., Bacharach, M., Bates, J., 1963: *Input-Output Relationships, 1951-1966*, Programme for Growth, Volume 3, Chapman and Hall, London, UK.
Studenski, P. 1958: *The Income of Nations: Theory, Measurement and Analysis Past and Present*. New York University Press, New York, USA.
Suh, S., 2001: *Macroeconomic Stability by means of Convergence Conditions of Infinite Product of a Matrix : A Note on the 'Correct' Economic Interpretation of the Hawkins-Simon Condition by Jeong (1982)*, CML Working Paper, CML, Leiden University, Leiden, The Netherlands.
Suh, S., 2004: The Portrait of W. Leontief, *International Journal of Life Cycle Assessment*, 9 (1), 1 (editorial).
Suh, S., 2004: *Comprehensive Environmental Data Archive (CEDA) 3.0. User's Guide*, Institute of Environmental Science (CML), Leiden University, Leiden, The Netherlands.
Suh, S., Heijungs, R., 2001: *Conditions of Power Series Expansion for Input-Output Systems with Mixed Measures*, CML Working Paper, CML, Leiden University, Leiden, The Netherlands.
Sully J., Hill N. *(Ed.)* 2003: *Atmospheric emission inventory guidbook*. European Environment Agency, Copenhagen, Denmark.
Szyrmer, J., Ulanowicz, R.E., 1987: Total Flows in Ecosystems. *Ecological Modelling*, 35, 123-136.
Takayama, A. 1985: *Mathematical Economics*, second edition, Cambridge University Press, Cambridge, UK.
Udo de Haes, H.A., van der Voet, E., 1997: Material Flow Accounting and Life Cycle Assessment In: D. Brune, D.V. Chapman, M.D. Gwynne, J.M. Pacyna (Eds), *The Global Environment. Science, Technology and Management*, Scandinavian Science Publishers, 1151-1171.
United Nations, 1968: *A System of National Accounts Studies in Methods, Series F, No. 2 Rev. 3*. UN, New York, USA.
United Nations, 1993: *System of National Accounts 1993*, UN, Washington DC. USA.
United Nations, 2003. *Integrated Environmental and Economic Accounting*. UN, ST/ ESA/ STAT/ SER.F/ 61/ Rev.1 (Final Draft).
Vasconcellos, M., Mackinson, S., Sloman, K., Pauly, D., 1997: The stability of trophic mass-balance models of marine ecosystems: a comparative analysis. *Ecological Modelling*, 100,125-134.
van der Voet, E.,1996: *Substances from cradle to grave: Development of a methodology for the analysis of substance flows through the economy and the environment of a region*. Ph.D. dissertation, Centre of Environmental Science (CML), Leiden University, Leiden, The Netherlands.
van der Voet, E., Guineé, J.B., Udo de Haes, H., and (Ed.), 2000: *Heavy Metals: A Problem Solved?* Kluwer Academic Publisher, Dordrecht, the Netherlands.
Victor, P. 1972: *Pollution, economy and the environment*, George Allen & Unwin, London, UK.
Vincent J.R., Panayotou, T. 1997: . . . or Distraction?. *Science* 276, 55
Westerberg, A.W., Hutchinson, H.P., Motard, R.L., Winter, P., 1979: *Process Flowsheeting*, Cambridge University Press, Cambridge, UK.
Williams, E., R. Ayres, M. Heller, 2002. The 1.7 kg microchip: energy and chemical use in the production of semiconductors, *Environmental Science and Technology* 36 (24), 5504-5510.
Wilting, H.C., 1996: *An energy perspective on economic activities*. Ph.D. Thesis, University of Groningen. The Netherlands.
Wright, D.J., 1974: Goods and services: an input-output analysis, *Energy Policy*, 2, 307-315.
Wrisberg, N., H.A.Udo de Haes, U.Triebswetter, P.Eder, R. Clift (Ed.) 2002: Analytical Tools for Environmental Design and Management in a Systems Perspective. The Combined Use of Analytical Tools, Kluwer Academic Publishers, Dordrecht, The Netherlands.

II. System Boundary Problem and the ISO standards on Life Cycle Assessment*

Abstract

Life-cycle assessment (LCA) is a method for evaluating the environmental impacts of products holistically, including direct and supply chain impacts. The current LCA methodologies and the standards by the International Organization for Standardization (ISO) impose practical difficulties for drawing system boundaries; decisions on inclusion or exclusion of processes in an analysis (the cut-off criteria) are typically not made on a scientific basis. In particular, the requirement of deciding which processes could be excluded from the inventory can be rather difficult to meet because many excluded processes have often never been assessed by the practitioner, and therefore their negligibility cannot be guaranteed. LCA studies utilizing economic input-output analysis have shown that in practice excluded processes can contribute as much to the product system under study as included processes, thus the subjective determination of the system boundary may lead to invalid results. System boundaries in LCA are discussed herein with particular attention to outlining hybrid approaches as methods for resolving the boundary selection problem in LCA. An input-output model can be used to describe at least a part of a product system, and an ISO-compatible system boundary selection procedure can be designed by applying hybrid input-output-assisted approaches. There are several hybrid input-output analysis-based LCA methods that can be implemented in practice for broadening system boundary and also for ISO compliance.

Keywords: LCA, system boundary, input-output analysis, hybrid methods, standards

* Reprinted from "Suh, S., M. Lenzen, G. Treloar, H. Hondo, A. Horvath, G. Huppes, O. Jolliet, U. Klann, W. Krewitt, Y. Moriguchi, J. Munksgaard, G. Norris, System Boundary Selection for Life Cycle Inventories, *Environmental Science & Technology*, 2004: 38 (3), 657-664" under the courtesy of American Chemical Society (ACS).

1. Introduction

The International Organization for Standardization (ISO) began publishing the 14000 series of Environmental Management System (EMS) standards in 1996. Since then the ISO 14000 series have been rapidly adopted globally, with more than 36,700 certifications awarded in 112 countries or economies (*1*). One of the most important elements of ISO 14000 is the 14040 section on life-cycle assessment (LCA), which is widely referred to in other ISO 14000 sections such as the ISO 14020 section on environmental labels and declarations. ISO 14040 presents a basic framework to objectively evaluate the environmental aspects of a product taking its whole life-cycle into account, and provides the rationale for environmental labels and declarations including type I, II and III programmes, many of which have been or are being incorporated into legal systems of countries such as Sweden, Japan, South Korea and the European Union.

However, the current LCA practices and the ISO standards on LCA impose practical difficulties for drawing a boundary around an LCA problem in such a way that the study produces reliable results; decisions on inclusion or exclusion of processes (the cut-off criteria) are typically not made on a scientific basis. In particular, the requirements of deciding which processes can be excluded from the system boundary can be difficult to meet because many excluded processes have never been assessed by the practitioner, and therefore their negligibility cannot be guaranteed. The boundary selection problem has been an important obstacle for "comparative assessment to be disclosed to the public" (*2*) since the equivalence of the system boundaries of two product systems is difficult to prove. The choice of system boundary may even have an influence on rankings in comparative studies, thus leading to wrong conclusions and decisions about which products to promote.

The subjectivity of system boundary selection allowed by the ISO standards is one of the key aspects of a lack of confidence in LCAs, especially in comparative studies. The problem of system boundaries in LCA is investigated herein, with particular attention to reviewing and outlining different methods to improve boundary selection practices using hybrid, economic input-output analysis.

2. ISO Standards and System Boundary Selection

According to the ISO 14040, ISO 14041, and ISO/TR 14049 standards (*2 - 4*), a system boundary is determined by an iterative process in which an initial system boundary is chosen, and then further refinements are made by including new unit processes that are shown to be significant by sensitivity analysis. The general principle to draw an initial system boundary of a

product system is described in ISO 14040 section 5.1.2.2, which corresponds to ISO 14041 5.3.3 (*2 - 3*):

> ... The system should be modeled in such a manner that inputs and outputs at its boundaries are elementary flows. ...

An elementary flow is defined by ISO (*3*);

(1) material or energy entering the system being studied, which has been drawn from the environment without previous human transformation
(2) material or energy leaving the system being studied, which is discarded into the environment without subsequent human transformation

This requirement can be satisfied within the current setup of process-based LCA practices only if there are some closed sets (clusters) of processes that receive products and services only from the set of processes that they belong to. If this condition is not met, i.e., all production processes are not directly or indirectly linked with other processes (for example, through supplying and consuming materials and energy), the system boundary has to be expanded, in principle, over the entire supply chain (often spanning the global economy). The existence of such process clusters in an economy may be difficult to prove or disprove. Regardless, considering the complex interdependence of processes in modern economies, it would be fair to assume that in general all processes are directly or indirectly connected. As a result, compliance with ISO standards on LCA seems practically impossible without models containing loops. This problem is left open by the ISO as clause 5.3.3 in ISO 14041 states (*2 - 3*):

> ...Decisions shall be made regarding which unit processes shall be modeled by the study and the level of detail to which these unit processes shall be studied. Resources need not be expended on the quantification of such inputs and outputs that will not significantly change the overall conclusions of the study. ...
>
> Any decisions to omit life-cycle stages, processes or inputs/outputs shall be clearly stated and justified. ...

Leaving out insignificant inputs and outputs from a system is generally referred to in LCA as a cut-off. However, it is very difficult in practice, before the actual data collection, to determine whether an input or an output will or will not significantly change the overall conclusion. Thus a justification for a cut-off as required by the ISO is difficult to make. The ISO suggests several indicators to be used for selecting significant inputs and outputs (clause 5.3.5 in ISO 14041) (*2 - 3*):

> ...Several criteria are used in LCA practice to decide which inputs to be studied, including a) mass, b) energy and c) environmental relevance. Making the initial identification of inputs based on mass contribution alone may result in important inputs being omitted from the study. Accordingly, energy and environmental relevance should also be used as criteria in this process...

Two of these three criteria are widely used while the third one, environmental relevance seems less applicable in practice (see, e.g., *5 - 6*). However, these criteria are only some of the traits of an input or an output that cannot fully determine the size of environmental consequences of the flow. There are several difficulties in selecting a system boundary based only on these criteria:

- there is no theoretical or empirical basis that guarantees that a small mass or energy contribution will always result in negligible environmental impacts;
- there are input flows – ancillary materials and process energy – that bypass the product system, and do not contribute mass or energy content to the final product. Further, the environmental impacts by inputs from service sectors cannot be properly judged on the basis of mass and energy either;
- although each single cut-off may have an insignificant contribution to the overall result, the sum of all cut-offs may change the results considerably.

One direction of research that aims at coping with the truncation problems is to refine cut-off criteria. Raynolds and his colleagues (*5 - 6*) developed the Relative Mass-Energy-Economic (RMEE) approach, which uses mass, energy and economic value as a criterion for whether or not to include a process into a life-cycle inventory (LCI). The authors note that the validity of this approach for non- energy and non-combustion-related air emissions has not been proven. It has also been demonstrated that the RMEE cut-off criterion does not ensure a degree of system completeness that is sufficient to guarantee valid conclusions (*7*). It is, therefore, practically very difficult to set an LCA system boundary in compliance with the current ISO standards since a decision must be made on the basis of what is not known while having to prove concurrently the negligibility of excluded processes.

3. Existing Methods for Compiling Life-cycle Inventories

Two basic methods are used in practice for compiling an LCI: *process analysis* and *input-output analysis*. Most LCIs have been performed based on process analysis where the resource uses and environmental releases from the

main production processes and some important contributions from suppliers of inputs into the main processes are assessed in detail (*3*, *8*).

Two approaches can be distinguished within the process analysis (*9*): the process flow diagram approach, and the use of matrix notation. In a process flow diagram approach process-specific data for each process in a product system are compiled, and remaining successive upstream inputs are considered to have negligible impact so that the branches of the "process tree" come to a finite end. In this approach both the number of processes that are involved in the product system and the order of upstream processes are limited. However, virtually all processes are inter-linked in the supply-demand web of a modern economy. Thus, an LCI compiled using a process flow diagram exhibits inherent system incompleteness.

Another approach uses matrix notation in describing the relations between processes and computing LCIs (*10* - *11*). In this approach, each column of the technology matrix is occupied by a vector of inputs and outputs per unit of operation time of each process, including the use and disposal phase. The LCI is calculated by inverting the technology matrix and multiplying it by an environmental matrix (*10*). This algorithm has advantages in representing infinite orders of upstream process relations, which cannot be achieved using the process flow diagram approach, and it has been utilized by a number of software and public LCI databases so far. However, those relations are limited to the processes that are included within the chosen system boundary. Thus, as in process-flow diagrams, the number of processes involved in this approach is limited, and inclusion or exclusion of processes is decided on the basis of subjective choices, resulting in a system boundary problem. Both process-based approaches generally neglect the input of capital goods, which can result in significant underestimation in LCI. This is particularly true for service industries where capital inputs can be significant.

In contrast, economic input-output analysis is a top-down technique that uses sectoral monetary transaction matrices describing complex interdependencies of industries within a national economy, and is a suitable approach for LCI (*12* - *15*). One of the advantages of input-output analysis for LCA is that such data are regularly compiled as parts of national statistics. Input-output analysis can take into account capital goods (*12*, *16*) and overheads (such as head offices, marketing, company cars, lunchrooms, etc.) as inputs to a product system, which are often deliberately left out by most of process LCIs. For instance, Ikaga et al. (*17*) compiled an inventory database for Japanese construction sector, which accounts for capital inputs by internalizing the capital expenditure and depreciation data in the input-output tables. This "capital effect" is thought to be particularly significant for service industries. Note, however, that capital expenditure can vary significantly from one year to the following due to the low frequency of

purchases of long-lived and expensive structures and equipment. Hence, the capital component in LCIs might be incorrectly estimated in years with atypical capital expenditure. Casler (*18*) suggests determining a representative mix of capital stock held by industries through time, and calculating a capital corrections matrix from the depreciation rates of capital stock items.

Input-output analysis has its own problems including the high level of aggregation in industry or commodity classifications (*19 - 20*). Since even the most disaggregated input-output table combines products and production technologies that are heterogeneous in terms of input materials and environmental intervention generation, input-output analysis on its own is less adequate for detailed LCA studies, especially of industry-atypical products. Furthermore, even if the production technology employed is the same, institutional variations can lead to significant aggregation errors. An example of this effect was presented by Keimel et al. (*21*) in their study of cumulative emissions of a passenger car. The ammonia emissions obtained by input-output analysis were some forty times higher than those obtained from process analysis. A closer look revealed that almost the whole difference stems from food used in the lunchrooms and business meals over the whole process chain. Lunchrooms in Germany are obligatory by legislation for larger companies, so that lunching activities will be regarded as industrial process for the larger companies, while the same is done as private consumption activities, and, thus, their environmental consequences will not be imputed to the product.

Moreover, monetary value, the most commonly used representation of interindustry transactions in input-output tables can distort physical flow relations between industries due to price inhomogeneity. Other important source of uncertainties in input-output analysis includes, but not limited to, import assumption and uncertainties due to data age. Total input requirements using single-region domestic input-output tables are usually calculated assuming that the imported commodities are produced using the same technology and structure of domestic industries. Thus, results of input-output analyses of countries that rely heavily on imports are subject to a relatively high uncertainty. Available input-output tables are generally several years old, thus assessing rapidly developing sectors and new technologies may introduce errors because of base-year differences between the product system under study and input-output data. Finally, an important source of error is the incompleteness of sectoral environmental statistics, which are often a disparate combination of models and reports in which small-to-medium-sized enterprises, mobile sources, and non-point sources may only be registered in part. Even the completeness of one of the most advanced emission inventories, the Toxics Release Inventory (TRI), has been questioned in a number of studies (see. eg. *22*). Ayres and Ayres (*22*) pointed

out that hazardous chemicals "disappeared" from the statistics including TRI. For instance, the estimated amount of barium releases from oil and gas extraction facilities (SIC 13) alone already exceed total releases of the same chemical accounted for in the TRI (1988) by a factor of 1700 (*22*, p. 185). Although several heavy polluters have been included in TRI since 1998, emissions from small-to-medium sized companies under threshold conditions are not accounted for at all by TRI.

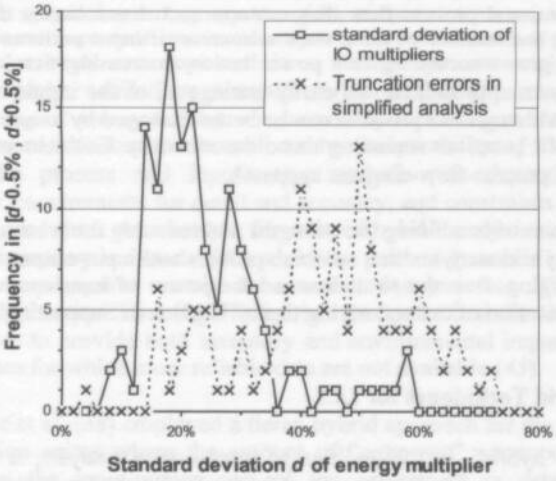

Figure 1. Frequency distribution of standard deviation of energy multipliers by Australian input-output accounts.
Truncation errors are systematic (always low), but input-output errors are stochastic, so that they are cancelled in sums (calculation based on (*7*)).

Process analysis is generally seen as more specific than input-output analysis, yet more labor- and time-intensive, and suffering from a systematic *truncation error*, which is due to the delineation of the product system under study by a finite boundary, and the omission of contributions outside this boundary. As quantifying the truncation error requires a full system, IO-LCA has been widely used to indirectly estimate the order of magnitude of truncated parts in process-LCA. For instance, Treloar (*23*) and Lenzen (*7*) simulated the amount of possible truncation in conventional LCI based on the process-flow-diagram approach using input-output analysis techniques. Assuming that conventional LCI covers requirements only up to the 2nd tier, the truncation error in conventional LCIs can be estimated. Figure 1 shows the frequency distribution for the standard deviation of energy multipliers in

Australian input-output accounts, and that for the truncation error of the simplified process-flow-diagram analysis, which counts only up to the 2nd upstream order. The results show that 31% of total 135 industries had truncation errors of higher than 50% if the upstream inputs from the 3rd tier and beyond are omitted, which indicates that important contributions may lie in far upstream inputs and cutting them off may result in a significant underestimation. Similar conclusions can be found by a number of studies (*13 - 15, 24 - 31*). Although it is a rather strong assumption that conventional LCI does not account for inputs beyond the second tier, the study shows that the conventional process-flow-diagram approach has inherent difficulties in expanding the number of tiers. As the number of input paths at the outmost processes grows according to a power law by increasing tiers, the process-flow-diagram approach cannot easily manage all of the inputs but only part of them. Although this problem can be better managed by a matrix approach, general LCI practices including those described by ISO standards still rely largely on process-flow-diagram approach.

With the aim of combining the strengths and reducing the weaknesses of each method, hybrid analyses that combine process and input-output analysis have been emerging. In order to understand the power of input-output analysis, a brief explanation of the underlying theory is given in Supporting Information.

4. Hybrid Techniques for LCI

The term 'hybrid', in the tradition of input-output analysis, is used in two different cases: one is for the use of both physical and monetary units, and the other is for the integration of sector- and process-level data (see. eg. *32 - 33*). In this paper, the term 'hybrid' is used mainly to describe the latter case, although physical units can be used at the same time. Combining process-level data with sector-level input-output analysis has been started in the field of energy input-output analysis, which has been widely practiced since 1970s after the oil shock (*33*). Input-output analysis could supply information for typical products or processes that are well represented by input-output categories while the rest of the products or processes could be modeled by process analysis. Bullard et al. (*34*) were the first to combine input-output analysis and process analysis, thus introducing a hybrid method to energy analysis. Their approach significantly extends the system boundary of a study while preserving process-specificity (*34 - 35*).

It was only early 1990s when LCA started to be discussed through scientific publications and international platforms such as Society of Environmental Toxicology and Chemistry (SETAC) and ISO (see. eg., *8, 36*). From the beginning, detailed processes were the main focus in LCA, and the virtues of the hybrid energy analyses from 1970s were hardly reflected in LCA

practices then. One very early exception was Moriguchi et al. (*37*) who analyzed the life-cycle CO_2 emissions of a motor vehicle using a hybrid approach. Even after Moriguchi et al. (*37*), the hybrid approach has not been quickly absorbed in mainstream LCA, and different forms of hybrid approaches have been proposed independently since the late 1990s.

In general, hybrid approaches can be grouped into three different categories, namely, tiered hybrid analysis, input-output based hybrid analysis and integrated hybrid analysis. In a *tiered hybrid analysis*, the direct and downstream requirements (eg. construction, use, maintenance, and end-of-life), and some important lower order upstream requirements of the product system under study are examined in a detailed process analysis, while remaining higher order requirements (eg. materials extraction and manufacturing of raw materials) are covered by input-output analysis (*38 - 42*). In general, the location as well as the comparability of the boundary between the process and input-output analysis part depends on data availability, requirements for detail and accuracy, and constraints in terms of cost, labor, and time. An example for a tiered hybrid analysis with an even first-order boundary is a model (*43*) where the product system is inserted into the direct requirements matrix as a new industry sector. The Missing Inventory Estimation Tool (MIET) 2.0 is a computer tool for tiered hybrid analysis (*44*) to provide both inventory and environmental impact scores of the processes for which more reliable data are not available (*45*).

Marheineke et al. (*38*) employed a tiered hybrid approach for the energy and transportation sector where the amount of "unknown" commodities to be covered by the input-output part of the assessment is determined by preparing a monetary balance for the "last" process to be covered by the process chain analysis. Subtracting the monetary value of the known input and the net value added from the specific process from the monetary value of the output results in the monetary value of the unknown commodity inputs to the process. These unknown commodity inputs have to be assigned to one or several sectors of the input-output table, which in general has to be based on expert judgement.

Hondo et al. (*46*) used the tiered hybrid approach in a different way. Since an input-output table usually covers only the economy of one nation or regional level, processes outside that economy cannot be properly modeled using single-region input-output techniques. Process analyses were performed for processes in the manufacture of some imported goods to Japan, and combined the process analysis results with an input-output-based inventory. Especially in the case of countries that rely on imports of important materials, this approach should be considered. It is also recommended in the LCA guide for buildings by the Architectural Institute of Japan.

Munksgaard et al. (*42*, *47*) applied extended input-output analysis to estimate the embodied energy (40 types) and CO_2 in goods (72 types) consumed by Danish households in 1992. The results were subsequently subjected to structural decomposition analysis in order to reveal underlying causes influencing CO_2 emissions. Using input-output techniques, Wier et al. (*48*) calculated the embodied energy and CO_2 in goods consumed by different types of households, and highlighted the influence of socio-economic characteristics. A tiered hybrid approach was undertaken in a study investigating the transport energy and CO_2 emissions embodied in two commodities consumed by Danish households: bread and potatoes. In the process part of the analysis, international transport (from importing countries to Denmark) was estimated, whereas input-output modelling (using Danish input-output and transport fuel use data) was applied to the remaining part of transport energy use (*49* - *50*). Estimations of international transport were based on travel distance, mode of transportation, type of energy use, and energy efficiency. Inherent problems of double counting were faced in the study, i.e., that national energy use matrices also include contributions from international trade. These problems were not solved satisfactorily.

In *input-output based hybrid analysis*, important input-output sectors are further disaggregated in case more detailed sectoral monetary data are available (*43*, *51* - *52*). A special case is the work by Joshi (*43*) where only one particular sector is disaggregated from an existing sector. Joshi (*43*) compared different fuel tanks using LCA by disaggregating an input-output sector that manufactures the products that are to be compared. In this way, detailed process-specific data can be fully utilized without double counting. It should be noted, however, that a national input-output table represents only pre-consumer stages of a product life-cycle based on domestic industries and use and end-of-life stage should be added to the results from disaggregated input-output table.

In the field of both energy analysis and LCA, the process-flow-diagram approach has been the main practice in quantifying the amount of environmental burdens. A more systematic method has been using the matrix notation from the early 1990s (see *10* - *11*). Suh and Huppes (*53*) and Suh (*16*) present a hybrid model that integrates the computational structure of a an LCA by Heijungs (*10*) and Heijungs and Suh (*11*) with an input-output analysis within a consistent mathematical framework throughout the whole life-cycle of a product. In their *integrated hybrid analysis* model, the process-based system is represented in a technology matrix by physical units per unit operation time of each process, while the input-output system is represented by monetary units. This model is derived from a make and use framework for both the process-based and the input-output-based system by linking them through flows crossing the border between the two systems. Using the integrated hybrid analysis, detailed unit process level information

in physical quantities is fully incorporated into the input-output model, which in turn represents the surrounding economy that embeds the process-based system. This approach enables a consistent allocation method throughout the hybrid system and avoids double counting by subtracting the commodity flows in a process-based system from the input-output system (see *54* for allocation).

Suh and Huppes (*55*) applied the integrated hybrid model to a flooring material. An existing detailed process-LCA by Gorrée et al. (*56 - 57*) was extended using U.S. input-output table and environmental statistics compiled by Suh (*44*). The process part of the analysis contains a total of 174 unit processes and corresponding environmental data. A total of six key issues are identified by the process analysis including linseed growing, on-site gas and electricity use, oil use for the production of maintenance products, transportation of raw materials, incineration of linoleum, and coal use for the production of detergents and acrylic dispersions/emulsions. However, there remain still a number of processes that have been cut off, including the production and transportation of pesticides, fertilizer, many additives, solvents, adhesives, catalysts, and capital goods. The cost information on these cut-offs was used to construct cut-off matrices, which were then connected to the process-based system and to a 1996 U.S. input-output table with various environmental emission data (*44*). A total of 1170 environmental emissions were compiled and connected to various environmental impact assessment factors. An LCA results based only on environmental input-output analysis of "miscellaneous flooring material" were also derived for comparison.

In comparison with a process-based LCA, the integrated hybrid analysis resulted in about 20% larger environmental impact for most of impact categories, except for terrestrial ecotoxicity impacts which were 75% larger. Impacts based only on input-output analysis showed large variations from –80% to +125% compared to the process-based result. These variations can be attributed to the high level of aggregation in the input-output commodity classification. On average, the results from hybrid LCA and input-output LCA were 18% and 3% higher than the process-based results, respectively.

Although hybrid approaches can in general substantially reduce the systematic truncation problem that is caused by an arbitrary system boundary selection, the question of locating the boundary between the process system and the input-output system still remains. For instance one may use process-specific data only for one process and fill in the inputs to the process with input-output data. The resulting LCI could be very different from that of a hybrid analysis that uses hundreds of processes for the process part. The results of a hybrid LCA with only a few processes will be similar to that of an input-output LCA, but it can gain resolution, when the process part becomes

larger, and process-specific data substitute for input-output data. However, one should beware that expanding the process part also means increasing data requirements, and therefore a balance should be considered in determining the boundary between the process part and the input-output part. The advantage is however, that at any time, the assessment is complete in terms of upstream requirements.

There are a few analytical tools that can be used to help determining such boundaries. An input-output technique called Structural Path Analysis (SPA) can be employed to extract a preliminary ranking of the most important input paths into the product system under study (*23*, *58* - *60*). This ranking can be used to prioritize the inventory list of a hybrid LCA, and to complete a conventional process-type LCI. A "Preliminary LCI" method for identifying the most important flows into the product system under study was developed by Hondo and Sakai (*61* - *62*). The distinctive feature of this method is its ability to prioritize, with little cost, all flows in an economy in order of importance by applying sensitivity analysis to input-output analysis. It allows a quantitative, objective, and reproducible selection of the system boundary, and an effective collection of data for the conventional process-type part of the LCI. Suh (*63*) presents a stochastic framework to select the system boundary between the process part and the input-output part based on uncertainty analysis using the Monte Carlo simulation technique. In this algorithm, flows that are to be connected to the input-output system are linked one by one and, at each time, Monte Carlo simulation is performed to see the dispersion characteristics of the result. The dispersion characteristics is used to decide whether current boundary between process part and the input-output part is acceptable in relation to the discernability with its alternatives or to the required data quality objectives of the study. In case inclusion of a certain flow results in a wide dispersion that is not acceptable, process-specific data can be further collected for such flows and thus the boundary between the two system is readjusted.

In a hybrid assessment, aggregated data in input-output part are substituted consecutively by specific, detailed process data for the most important lower order requirements, thus continuously making the inventory more reliable and accurate. Whenever process data or resources are unavailable, or the required level of uncertainty is achieved, the process part can be truncated, and remaining requirements covered by input-output analysis. Thus, the boundary delineation of a hybrid assessment task can be elegantly tailored to suit requirements of specificity, accuracy, cost, labor, and time. It should be noted, however, that different hybrid approaches have different strengths and weaknesses, and the choice of method should be made considering various factors, including data requirements, required time and resources, the relevance of imports for a national economy, and the level of aggregation in a national input-output table (Table 1).

Table 1. Comparison between hybrid approaches

Approach	Strengths	Weaknesses	Methodological reference	Case studies
Tiered hybrid	Easy to use. Literatures, databases and case studies well documented.	Problem of double counting. Recurring flows are not properly described by process-flow diagram approach.	Bullard et al. (*34*).	Moriguchi et al. (*12*), Marheineke et al. (*38*), Hondo et al. (*46*), Munksgaard et al. (*42*, *47*).
Input-output based hybrid	Avoid double counting. Process part and input-output part are described in a consistent framework	Use and end-of-life phase are externally added to the main system. Recurring flows between the main system and use and end-of-life phase are not properly described. Should be combined with other methods if the national economy is highly dependent upon imports	Joshi (*43*).	Joshi (*43*).
Integrated hybrid	Consistent mathematical framework for the whole life-cycle. Avoid double counting. Easy to apply analytical tools	Relatively complex to use. High data and time requirements	Suh (*16*).	Suh and Huppes (*53*), Suh (*63*).

larger, and process-specific data substitute for input-output data. However, one should beware that expanding the process part also means increasing data requirements, and therefore a balance should be considered in determining the boundary between the process part and the input-output part. The advantage is however, that at any time, the assessment is complete in terms of upstream requirements.

There are a few analytical tools that can be used to help determining such boundaries. An input-output technique called Structural Path Analysis (SPA) can be employed to extract a preliminary ranking of the most important input paths into the product system under study (*23*, *58* - *60*). This ranking can be used to prioritize the inventory list of a hybrid LCA, and to complete a conventional process-type LCI. A "Preliminary LCI" method for identifying the most important flows into the product system under study was developed by Hondo and Sakai (*61* - *62*). The distinctive feature of this method is its ability to prioritize, with little cost, all flows in an economy in order of importance by applying sensitivity analysis to input-output analysis. It allows a quantitative, objective, and reproducible selection of the system boundary, and an effective collection of data for the conventional process-type part of the LCI. Suh (*63*) presents a stochastic framework to select the system boundary between the process part and the input-output part based on uncertainty analysis using the Monte Carlo simulation technique. In this algorithm, flows that are to be connected to the input-output system are linked one by one and, at each time, Monte Carlo simulation is performed to see the dispersion characteristics of the result. The dispersion characteristics is used to decide whether current boundary between process part and the input-output part is acceptable in relation to the discernability with its alternatives or to the required data quality objectives of the study. In case inclusion of a certain flow results in a wide dispersion that is not acceptable, process-specific data can be further collected for such flows and thus the boundary between the two system is readjusted.

In a hybrid assessment, aggregated data in input-output part are substituted consecutively by specific, detailed process data for the most important lower order requirements, thus continuously making the inventory more reliable and accurate. Whenever process data or resources are unavailable, or the required level of uncertainty is achieved, the process part can be truncated, and remaining requirements covered by input-output analysis. Thus, the boundary delineation of a hybrid assessment task can be elegantly tailored to suit requirements of specificity, accuracy, cost, labor, and time. It should be noted, however, that different hybrid approaches have different strengths and weaknesses, and the choice of method should be made considering various factors, including data requirements, required time and resources, the relevance of imports for a national economy, and the level of aggregation in a national input-output table (Table 1).

Table 1. Comparison between hybrid approaches

Approach	Strengths	Weaknesses	Methodological reference	Case studies
Tiered hybrid	Easy to use. Literatures, databases and case studies well documented.	Problem of double counting. Recurring flows are not properly described by process-flow diagram approach.	Bullard et al. (*34*).	Moriguchi et al. (*12*), Marheineke et al. (*38*), Hondo et al. (*46*), Munksgaard et al. (*42*, *47*).
Input-output based hybrid	Avoid double counting. Process part and input-output part are described in a consistent framework	Use and end-of-life phase are externally added to the main system. Recurring flows between the main system and use and end-of-life phase are not properly described. Should be combined with other methods if the national economy is highly dependent upon imports	Joshi (*43*).	Joshi (*43*).
Integrated hybrid	Consistent mathematical framework for the whole life-cycle. Avoid double counting. Easy to apply analytical tools	Relatively complex to use. High data and time requirements	Suh (*16*).	Suh and Huppes (*53*), Suh (*63*).

Table 2. Data availability for environmental input-output analysis

Country	Number of Sectors	Base Year	Types of interventions covered	Reference
USA	94 - 491	1992, 1996, 1997, 1998	Energy, Toxic pollutants from manufacturing industry, greenhouse gas emissions, pesticide use, nutrient emission, conventional pollutant emission	Suh (*44*), Green Design Initiative (*66*)
Japan	349 ('75,'80) 406 ('85) 405 ('90) 397 ('95)	1975, 1980, 1985, 1990, 1995	Energy, emissions of CO_2, CH_4, N_2O, NO_x, SO_x, SPM	Kondo and Moriguchi (*67*), Hondo et al. (*68 - 69*), Nansai et al. (*70*)
Germany	59	1997	30 energy carriers, water, 3 types of waste, emissions of CO_2, CH_4, N_2O, CO, NO_x, Non-methane volatile organic compounds, SO_2, particles	Statistisches Bundesamt (*71 - 72*)
Australia	135	1994, 1995	27 energy types, emissions of CO_2, CH_4, N_2O, CO, NO_x, Non-methane volatile organic compounds, CF_4, C_2F_6, HFC134a, SO_2, SF_6, water use (mains and self-supplied), land disturbance (6 land types)	Lenzen (*52*), Lenzen and Murray (*73*), Lenzen and Foran (*74*)
Netherlands	45 – 267	1996, 1997, 1998, 1999	Greenhouse gas emission, conventional pollutants, toxic pollutants from manufacturing industry	CBS (*75*), IVAM (*76*)
Denmark	130	1997	35 energy types, water, 8 types of emissions to air	Pedersen (*77*)

5. Relationship Between ISO Standards and Hybrid Analysis

ISO 14041 clause 4.5 describes the procedure of product system modeling (*3*):

> LCA studies are conducted by developing models that describe the key elements of physical systems. ... The models used should be described and the assumptions underlying those choices should be identified. ...

Since an input-output table describes how industries interact through supplying and consuming products and services, an input-output model describes key elements of a physical system adequately. If appropriate environmental data are available, and underlying assumptions are clearly noted, an input-output model should be appropriate to describe the product system within the ISO guidelines. There are, however, a number of other concerns: data collection in LCA is carried out through several steps, including setting data quality requirements, the actual data collection, a validity check and data quality assessment, etc. According to the ISO standards, data quality requirements should include time-related, geographical, and technology coverage (*3*). In addition, the ISO provides several additional data quality requirements including precision, representativeness, and consistency, which should be considered depending on the goal and scope of the study. If the collected data cannot meet the predefined data quality requirements, the LCA practitioner should in principle either change the data quality requirements or abort the study. In general, input-output tables provide rather aggregated data with several years of time lag, which lower the data quality for most of the requirements except for the completeness. If the data used for the input-output part significantly lacks the quality required in accordance with the goal and scope of the study, they cannot be used.

For example, input-output data for a product system that (1) is heavily dependent on a newly developed technology or imported goods, or that (2) shares only a very small and atypical portion of an industry's output, may exhibit significantly lower data quality than corresponding process-specific data in terms of time-related coverage, geographical coverage, precision and representativeness. However, this problem can be better managed in hybrid analyses by altering the boundary between process analysis and the input-output part in such a way that the advantages of the two methods are maximized. For example Hondo et al. (*46*) employed process analysis where the corresponding input-output data lacked geographical coverage for several important processes outside Japan. Thus, hybrid approaches with uneven boundaries can be viewed as an attempt to adjust the boundary between the input-output and the process part in order to maximize the benefits of the two

approaches. Hence, input-output techniques should be introduced into current ISO standards through hybrid frameworks.

Although current ISO standards are based on process analysis, according to clause 4.5 of ISO 14041, they do not preclude an input-output model to be used in order to describe (part of) a product system. Moreover, as was shown in the previous section, selecting a system boundary in compliance with ISO standards is, in practice, impossible without using the input-output model, and hybrid techniques using input-output analysis can therefore form a central element of ISO-compatible system boundary selection practices. Hybrid approaches preserve process-specificity as much as possible, and enable comparative LCAs on the basis of equivalent system boundaries between two product systems.

In order to utilize the many advantages of these hybrid approaches in system boundary selection, however, one needs to possess an input-output table containing reliable environmental data, which is not readily available for many countries. Therefore, research efforts should be devoted further to develop well-structured, environmentally augmented input-output tables. To do so, efforts should be made in the direction of developing better statistics on environmental emissions and resources use that can be used in input-output LCA. In the long term, the development of a multi-national environmental input-output model with complete trade links is very much desirable, especially in connection to regionalized LCIA methods that will result in a complete system with regional specification (*64*). Besides the lack of data on international commodity flows, there are also many differences in the compilation of input-output tables in different countries such as differences in industry and commodity classification, treatment of capital, treatment of taxes, etc. Differences in covered substances and completeness between national environmental emission inventories are other obstacles. Solving these problems requires international coordination that can bring a harmonized action towards an international environmental input-output framework (*cf. 65*).

Methods and tools for "internal" boundary selection, avoiding double counting, compatible allocation, etc. are the topics that need further developments. Hybrid LCA is still considered a complex tool even to those who already have used LCA. Efforts should be made on case studies and dissemination of useful findings as well as developments of user friendly software that enables hybrid LCA.

References

1. *Eleventh cycle - The ISO Survey of ISO 9000 and ISO 14000 Certificates.* International Organization for Standardization (ISO): Geneva, Switzerland, 2002.
2. *International Standard 14040: Environmental management - Life cycle assessment - Principles and framework.* International Organization for Standardization (ISO): Geneva, Switzerland, 1997.
3. *International Standard 14041: Environmental management - Life cycle assessment - goal and scope definition and inventory analysis.* International Organization for Standardization (ISO): Geneva, Switzerland, 1998.
4. *International Standard ISO/TR 14049: Environmental management - Life cycle assessment - Examples of application of ISO 14041 to goal and scope definition and inventory analysis.* International Organization for Standardization (ISO): Geneva, Switzerland: 2000.
5. Raynolds, M.; Fraser, R.; Checkel, D. *Int. J. LCA.* 2000, *5* (1), 37-46.
6. Raynolds, M.; Fraser, R.; Checkel, D. *Int. J. LCA.* 2000, *5* (2), 96-104.
7. Lenzen, M. *J. Ind. Ecol.* 2001, *4* (4), 127-148.
8. Consoli, F.; Allen, D.; Bounstead, I.; Fava, J.; Franklin, W.; Jensen, A.A.; de Oude, N.; Parirish, R.; Perriman, R.; Postlethwaite, D.; Quay, B.; Séguin, J.; Vigon, B. *Guidelines for Life-Cycle Assessment: A 'Code of Practice'.* Society of Environmental Toxicology and Chemistry (SETAC), Washington, D.C., 1993.
9. Suh, S.; Huppes G. *J. Cleaner Production.* 2003, *in press.*
10. Heijungs, R. *Ecol. Econ.* 1994, *10* (1), 69-81.
11. Heijungs, R.; Suh, S. *The computational structure of life cycle assessment.* Kluwer Academic Publisher: Dordrecht, the Netherlands, 2002.
12. Moriguchi, Y.; Kondo, Y.; Shimizu, H. a. *Industry and Environment.* 1993, *16* (1-2), 42-45.
13. Lave, L.B.; Cobas-Flores, E.; Hendrickson, C.T.; McMichael, F.C. *Environ. Sci. Technol.* 1995, *29* (9), 420A-426A.
14. Norris, G.A. Presented at SETAC 17th Annual Meeting: Washington, D.C., 1995.
15. Hendrickson, C.; Horvath, A.; Joshi, S.; Lave, L. *Environ. Sci. Technol.* 1998, *32* (7), 184A-191A.
16. Suh, S. *Ecol. Econ.* 2003, *accepted.*
17. Ikaga, T.; Tonooka, Y.; Hondo, H. Presented at the third international conference on EcoBalance: Tsukuba, Japan, 1998.
18. Casler, S. *Energy Systems and Policy.* 1983, *7* (3), 171-193.
19. Bullard, C.W.; Sebald A.V. *Rev. Econ. Stat.* 1988, *LXX* (4), 708-712.
20. Sakai, S.; Tanno, S.; Hondo, H. Presented in the fourth international conference on EcoBalance: Tsukuba, Japan, 2000.
21. Keimel, H.; Klann, U.; Ortmann, C.; Pehnt M. In *Forschungswerkstatt Nachhaltigkeit*; Grunwald, A.; Coenen, R.; Nitsch, J.; Sydow A.; Wiedemann, P. Ed.; Edition Sigma: Berlin, Germany, 2001.
22. Ayres R.U.; Ayres L.W. *Accounting for resources, 1.* Edward Elgar: Cheltenham, U.K. 1998.
23. Treloar, G. *Economic Systems Research.* 1997, *9* (4), 375-391.
24. Born, P. *Journal of Policy Modeling.* 1996, *18* (2), 217-221.
25. Pick, E.; Wagner, H.-J. *Beitrag zum kumulierten Energieaufwand ausgewählter Windenergiekonverter.* Fachgebiet Ökologisch verträgliche Energiewirtschaft, Universität GH: Essen, Germany, 1998.

26. Weber, F.-A.; Jenseit, W.; Fritsche U. R. *Bestimmung des Kumulierten Energieaufwands (KEA) durch Input-Output- und Prozeßketten-Analyse am Beispiel des Sektors Nichtmetalle*. Arbeitspapier im Rahmen des UBA-F&E-Vorhabens Nr. 104 01 123, Öko-Institut (Institut für angewandte Ökologie e.V.): Darmstadt, Germany, 1999.
27. Lenzen, M.; Dey, C. J. *Energy*. 2000. 25, 577-585.
28. Nansai, K.; Tohno, S.; Kasahara, M. *Energy and Resources*. 2001, *22* (5) (published by the Japan Society of Energy and Resources, in Japanese).
29. Treloar, G.; Love, P.E.D.; Holt, G. *Construction, Management and Economics*. 2001, *19*, 49-61.
30. Yoshida, Y.; Ishitani, H.; Matsuhashi, R.; Kudoh, Y.; Okuma, H.; Morita, K.; Koike, A.; Kobayashi, O.; Yoshioka, K. *Technology*. 2001, *8*, (S1).
31. Lenzen, M.; Treloar, G. *Journal of Industrial Ecology*. 2003, *6*, (3-4), 137-160
32. Chapman, P.F. *Energ. Policy*. 1974, *2*, (2), 91-102.
33. *Energy Analysis Workshop on Methodology And Conventions*. International Federation of Institutes for Advanced Studies (IFIAS), Stockholm, Sweden, 1974.
34. Bullard, C.W.; Penner, P.S.; Pilati, D.A. *Resources and Energy*. 1978, *1*, 267-313.
35. Moskowitz, P.D.; Rowe, M.D. In *Health and Environmental Risk Assessment*; Ricci, P.F.; Rowe, M.D., Ed.; Pergamon Press: New York, 1985; pp. 281-293.
36. Heijungs, R.; Guinée, J.B.; Huppes, G.; Lankrijer, R.M.; Udo de Haes, H.A.; Wegener Sleeswijk, A.; Ansems, A.M.M.; Eggels, A.M.M.; van Duin, R.; de Goede, H.P.; *Environmental life cycle assessment of products: Guidelines and backgrounds*; Centre of Environmental Sciences (CML): Leiden, Netherlands, 1992.
37. Moriguchi, Y.; Kondo, Y.; Shimizu, H. *Energy Economics*. 1993b, *19*, (4), 36-45, (published by the Japan Institute of Energy Economics, in Japanese).
38. Marheineke, T.; Friedrich, R.; Krewitt, W. Presented at Society of Automotive Engineers (SAE) Conference. 1999.
39. Treloar, G.; Love, P.E.D.; Iyer-Raninga, U.; Faniran, O.O. *Construction, Management and Economics*. 2000, *18*, 5-9.
40. Treloar, G. J.; Fay, R.; Love, P.E.D.; Iyer-Raninga, U. *Building Research and Information*. 2000, *28*, (5), 184-195.
41. Nansai, K.; Tohno, S.; Kono, M.; Kasahara, M.; Moriguchi, Y. *Appl. Energ.* 2001, *70*, 251-265.
42. Munksgaard, J.; Pedersen, K.A.; Wier, M. *Int. J. Environ. Pollut.* 2001, *15* (2), 146-158.
43. Joshi, S. *Journal of Industrial Ecology*. 1999, *3* (2&3), 95-120.
44. Suh, S. *Missing Inventory Estimation Tool (MIET) 2.0*; User's guide; Centre of Environmental Science, Leiden University: Leiden, the Netherlands, 2001.
45. Suh, S.; Huppes, G. *Int. J. LCA*. 2002, *7* (3), 134-140.
46. Hondo, H.; Nishimura, K.; Uchiyama, Y. *Energy requirements and CO_2 emissions in the production of goods and services: Application of an input-output table to life cycle analysis*; Central Research Institute of Electric Power Industry, CRIEPI Report Y95013: Tokyo, Japan, 1996.
47. Munksgaard, J.; Pedersen, K.A.; Wier, M. *Energy Economics*. 2000, *22*, 423-440.
48. Wier, M.; Lenzen, M.; Munksgaard, J.; Smed, S. *Economic Systems Research*. 2001, *13*, (3), 259-274.

49. Jespersen, P.H.; Munksgaard, J. In *Trafikdage on University of Aalborg*; Danish Transport Council and Traffic Research Group on University of Aalborg: Aalborg, Denmark, 2001
50. Munksgaard, J. In *Input/Output analysis - Shortcuts to life cycle data? Environmental Project No. 581*; Weidema, B.P.; Nielsen, A.M., Ed.; Miljøstyrelsen: Copenhagen, Denmark, 2001.
51. Gibbons, J. C.; Wolsky, A.M.; Tolley, G. *Resources and Energy*. 1982, *4*, 203-230.
52. Lenzen, M. *Economic Systems Research*. 2001, *13*, (1), 65-92.
53. Suh, S.; Huppes, G. *Gearing input-output model to LCA - Part I: General framework for hybrid approach*; CML-SSP Working Paper 2000.007; Centre of Environmental Science, Leiden University: Leiden, the Netherlands, 2000.
54. Suh, S.; Huppes, G. Presented at 12th Annual SETAC Europe Meeting, Vienna, Austria, 2002.
55. Suh, S.; Huppes, G. Presented at 11th Annual SETAC Europe Meeting, Madrid, Spain, 2001.
56. Gorrée, M.; Guinée, J.; Huppes, G.; van Oers, L. *Int. J. LCA*. 2002, *7*, (3), 158-166.
57. Gorrée, M.; Guinée, J.; Huppes, G.; van Oers, L. *Environmental life cycle assessment of Linoleum*; CML report 151; Centre of Environmental Science, Leiden University: Leiden, the Netherlands, 2000.
58. Lenzen, M. *Journal of Cleaner Production*. 2002, *10*, 545-572.
59. Lenzen, M. Treloar, G. *Energ. Policy*. 2002, *30* (3), 249-255.
60. Suh, S. *Accumulative Structural Path Analysis for Life Cycle Assessment*. CML-SSP Working Paper 2003.001; Centre of Environmental Science, Leiden University: Leiden, the Netherlands, 2003.
61. Hondo, H.; Sakai, S. Presented at *The Fourth International Conference on EcoBalance*, Tsukuba, Japan, 2000.
62. Hondo, H; Sakai, S. *Journal of Advanced Science*. 2001, *13* (3), 491-494.
63. Suh, S. Presented at the *13th Annual SETAC Europe Meeting*, Hamburg, Germany, 2003.
64. Suh, S.; Ed., *Proceedings of the First European Network of Environmental Input-Output Analysis Meeting*; Centre of Environmental Science, Leiden University: Leiden, the Netherlands.
65. *Integrated Environmental and Economic Accounting*. United Nations (UN), ST/ ESA/ STAT/ SER.F/ 61/Rev.1 (Final Draft), 2003.
66. *Environmental input-output life cycle assessment*. Green Design Initiative, Carnegie Mellon University, Pittsburgh, PA, USA, 2002. (www.eiolca.net).
67. Kondo, Y.; Moriguchi, Y. *Carbon dioxide emission intensity based on the Input-Output Analysis*. CGER Report; CGER-D016-'97; Center for Global Environmental Research, National Institute for Environmental Studies: Tsukuba, Japan, 1997.
68. Hondo, H.; Sakai, S.; Tanno, S. *Applied Energy*. 2002, *72*, (3-4), 689-704.
69. Hondo, H.; Moriizumi, Y.; Tonooka, Y. *Estimation of energy and greenhouse gas intensities using 1995 Japanese input-output table: inventory data reflecting the actual conditions of overseas production activities*. CRIEPI Report Y01009; Central Research Institute of Electric Power Industry: Tokyo, Japan, 2002.
70. Nansai, K.; Moriguchi, Y.; Tohno, S. *Embodied Energy and Emission Intensity Data for Japan Using Input-Output Tables (3EID) - Inventory data for LCA.*

CGER Report CGER-D031-2002; Center for Global Environmental Research, National Institute for Environmental Studies: Tsukuba, Japan, 2002.
71. *Umweltökonomische Gesamtrechnung: Material- und Energieflussrechnung 2001*. Fachserie 19, Reihe 5; Statistisches Bundesamt: Stuttgart, Germany, 2002.
72. *Volkswirtschaftliche Gesamtrechnung: Input-Output-Rechnung 1997*. Statistisches Bundesamt; Fachserie 18, Reihe 2: Stuttgart, Germany, 2002.
73. Lenzen, M.; Murray, S.A.. *Ecol. Econ.* 2001, *37*, (2), 229-255.
74. Lenzen, M.; Foran, B. *Water Policy*. 2001, *3*, (4), 321-340.
75. *Nationale Rekeningen 2000*. Central Bureau of Statistics (CBS), Voorburg / Heerlen, Netherlands, 2001.
76. *Environmental input-output data for the Netherlands*. IVAM database, IVAM: Amsterdam, Netherlands, 2002.
77. Pedersen, O.G. In *Modelling the Economy and the Environment*; Madsen, B.; Jensen-Butler, C.; Mortensen, J.B.; Christensen, A.M.B., Ed., Springer-Verlag: Berlin, Germany, 1996.

III. Foundations of Hybrid Life Cycle Assessment*

Abstract

In contrast to macroscopic tools, Life Cycle Assessment (LCA) starts from the microstructure of an economic system: the production and consumption of functional flows. Due to the level of resolution required for function-level details, the model used for LCA has relied on process-specific data and has treated the product system as a stand-alone system instead of a system embedded within a broader economic system. This separation causes various problems, including incompleteness of the system and loss of applicability for a variety of analytical tools developed for LCA or economic models. This study aims to link the functional-flow-based, micro-level LCA system to its embedding, commodity-based, meso- or macro-level economic system represented by input-output accounts, resulting in a comprehensive ecological-economic model within a consistent and flexible mathematical framework. For this purpose, the LCA computational structure is reformulated into a functional-flow by process framework and reintroduced in the context of the input-output tradition. It is argued that the model presented here overcomes the problem of incompleteness of the system and enables various analytical tools developed for LCA or Input-Output Analysis (IOA) to be utilised for further analysis. The applicability of the model for cleaner production and supply chain management is demonstrated using a simplified product system and structural path analysis as an example.

Keywords: Life Cycle Assessment (LCA), Input-Output Analysis (IOA), hybrid analysis, system boundary, comprehensive ecological-economic model, functional flow

* Reprinted from "Suh. S., Functions, commodities, and environmental impacts in an ecological-economic model, *Ecological Economics*, 2004: 48 (4), 451-467" under the courtesy of Elsevier B.V.

CGER Report CGER-D031-2002; Center for Global Environmental Research, National Institute for Environmental Studies: Tsukuba, Japan, 2002.
71. *Umweltökonomische Gesamtrechnung: Material- und Energieflussrechnung 2001*. Fachserie 19, Reihe 5; Statistisches Bundesamt: Stuttgart, Germany, 2002.
72. *Volkswirtschaftliche Gesamtrechnung: Input-Output-Rechnung 1997*. Statistisches Bundesamt; Fachserie 18, Reihe 2: Stuttgart, Germany, 2002.
73. Lenzen, M.; Murray, S.A.. *Ecol. Econ.* 2001, *37*, (2), 229-255.
74. Lenzen, M.; Foran, B. *Water Policy*. 2001, *3*, (4), 321-340.
75. *Nationale Rekeningen 2000*. Central Bureau of Statistics (CBS), Voorburg / Heerlen, Netherlands, 2001.
76. *Environmental input-output data for the Netherlands*. IVAM database, IVAM: Amsterdam, Netherlands, 2002.
77. Pedersen, O.G. In *Modelling the Economy and the Environment*; Madsen, B.; Jensen-Butler, C.; Mortensen, J.B.; Christensen, A.M.B., Ed., Springer-Verlag: Berlin, Germany, 1996.

III. Foundations of Hybrid Life Cycle Assessment*

Abstract

In contrast to macroscopic tools, Life Cycle Assessment (LCA) starts from the microstructure of an economic system: the production and consumption of functional flows. Due to the level of resolution required for function-level details, the model used for LCA has relied on process-specific data and has treated the product system as a stand-alone system instead of a system embedded within a broader economic system. This separation causes various problems, including incompleteness of the system and loss of applicability for a variety of analytical tools developed for LCA or economic models. This study aims to link the functional-flow-based, micro-level LCA system to its embedding, commodity-based, meso- or macro-level economic system represented by input-output accounts, resulting in a comprehensive ecological-economic model within a consistent and flexible mathematical framework. For this purpose, the LCA computational structure is reformulated into a functional-flow by process framework and reintroduced in the context of the input-output tradition. It is argued that the model presented here overcomes the problem of incompleteness of the system and enables various analytical tools developed for LCA or Input-Output Analysis (IOA) to be utilised for further analysis. The applicability of the model for cleaner production and supply chain management is demonstrated using a simplified product system and structural path analysis as an example.

Keywords: Life Cycle Assessment (LCA), Input-Output Analysis (IOA), hybrid analysis, system boundary, comprehensive ecological-economic model, functional flow

* Reprinted from "Suh. S., Functions, commodities, and environmental impacts in an ecological-economic model, *Ecological Economics*, 2004: 48 (4), 451-467" under the courtesy of Elsevier B.V.

1. Introduction

Since the beginning of the last century, ecologists have been borrowing ideas and concepts from economics. Entities in an ecosystem are viewed as economic agents that process materials and energy, terms like producers and consumers have been widely adopted in ecology, and productivity and efficiency have become the main interests of ecologists (Worster, 1994).

Recently, there has been a movement in the opposite direction as well, in that principles of ecology have come to be utilised for industrial and economic systems. In the field of industrial ecology, for instance, an industrial system is viewed as a self-organising system, with interest focusing on its metabolism, which describes how materials and energy are processed, used and disposed of (see e.g., Graedel & Allenby (1995) and Ayres & Ayres (1996)). One pillar of the industrial metabolism discourse is the role of commodities. An obvious role of commodities and their supply network is the circulation of materials and energy in an economy, which, in turn, generates pollutants and wastes and causes environmental impacts. The circulation of materials and energy and the generation of pollutants and wastes characterise the physical terms of commodities in an economic system, while what is more interesting from the economics side is the utilities or functions of commodities, which actually lead consumers to demand the commodity (Sen, 1999). Thus, it is not only the physical implications but also the functions of commodities that are essential in describing the metabolic structure of an economic system.

The present paper concerns the connection between the physical and the functional terms of commodities in a model which is called here ecological-economic, and which describes materials and energy exchanges within and between the economic system and the environment. The model is structured on the basis of an extended framework of Life Cycle Assessment (LCA).

LCA describes the microstructure of an ecological-economic system, its main focus being the production and consumption of a functional flow and its environmental consequences (Guinée et al., 2002). This bottom-up approach concerns prevention of pollution at the level of production and consumption of a specific product, or more precisely, a specific function of a product, through eco-labelling, process redesign, cleaner production, supply chain management, etc. Thus, the model needed by LCA should, on the one hand, be able to describe individual processes and their inter-relations in detail and, on the other hand, be system-encompassing. In practice, however, the two objectives, i.e., level of detail and system completeness, are difficult to attain at the same time. As the number of inputs increases through upstream processes, system analysts have to stop compiling upstream data at a certain stage, or they have to use more aggregated data, thus losing process

specificity. Most LCA studies opt for process specificity, rather than for completeness of the system.

Attempts to overcome the incompleteness of a process analysis by using Input-Output Analysis (IOA) are generally referred to as hybrid analysis (see e.g. Bullard et al., 1978). However, the model structures of process analysis and input-output analysis have not been fully integrated in hybrid analyses so far. Hybrid analysis, including hybrid energy analysis, utilises matrix representation only for the input-output part, while process analysis is dealt with separately by using a process flow diagram approach. This separation in the computational structure imposes several constraints on hybrid models.

The main questions addressed by the present paper are 'how can we better link the microstructure of an ecological-economic system dealt with in LCA to its embedding economic system?', and 'what are the relevant forms and structures of the LCA and IOA that are to be integrated?'. To answer these questions, I present a model that integrates the computational structures of IOA and LCA within a consistent framework, enabling various analytical tools to be applied to the model.

2. Survey of hybrid models

The general framework of hybrid analysis was introduced as early as the 1970s in the context of energy analysis. The discipline of energy analysis has used process analysis – or vertical analysis – and input-output based energy analysis in parallel for slightly different purposes (see IFIAS (1974)). It was Bullard & Pillati (1976) and Bullard et al. (1978) who calculated the net energy requirements of a product by combining the results of process analysis and input-output analysis. This allowed the incomplete system of process-based energy analyses to be significantly improved. In the field of input-output energy analysis, the approach developed by Bullard and his colleagues has become common practice, and many empirical studies are available (see eg., Engelenburg et al. (1994), Wilting (1996)).

Input-output techniques have been studied as a tool for LCA since the early 1990s. Moriguchi et al. (1993) were the first to analyse the life-cycle CO_2 emissions of an automobile, using both the Japanese input-output table and process analysis. Since the study by Moriguchi et al. (1993), there have been many LCA studies and software tools using input-output techniques, including Lave et al. (1995), Treloar (1997), Marheineke et al. (1998), Hendrickson et al. (1998), Joshi (2000), and Suh and Huppes (2002) (see Suh et al. (2004) for details).

Although the area of application, the level of aggregation and the number of pollutants covered in these studies vary, the result of a hybrid analysis has been the simple sum of process analysis and input-output based analysis. In other words, the computational structure of LCA has not been fully integrated with that of IOA, which creates several difficulties.

One problem is that the commodity flows described in the process-based system are, in principle, also described in the input-output system, which leads to misspecification through double counting.[1] Furthermore, current hybrid techniques are unable to systematically model the interactive relationship between process-based system and input-output system through both inputs and outputs. For example, in analysing different options of reusing or recycling wastes from the disposal phase of a product system, each option simultaneously changes the input structure not only of the process-based system but also of the input-output based system. It is important to note that the relationship between the process-based system and the input-output based system, representing the microstructure of the commodity flows web and the wider, embedding economy, respectively, is interactive, and that an integrated model is required to represent this interactive relation.

In addition, there are also practical difficulties in using analytical tools consistently. Various analytical tools have been developed for LCA or IOA, including structural decomposition analysis, structural path analysis, field of influence analysis, Monte Carlo simulation, perturbation analysis, linear programming, sensitivity analysis etc. In implementing the computations for these analyses, each system has to be treated differently, due to the difference in computational structure, resulting in loss of consistency.

3. Computational structures of IOA and LCA

3.1. Input-Output Analysis (IOA)

The basic computational structure of input-output models is briefly discussed here, based on Leontief (1936) and Leontief (1941). Leontief's model starts

[1] Suppose a simplified case that an industry sector in an input-output table, for instance, automobile manufacturing includes passenger cars and trucks, which shares 80% and 20% of the total sales, respectively. A process-based LCA study compiled process-specific data for production of passenger cars within the process-based system. There are, however, some missing inputs of trucks, and they are to be linked to a relevant input-output sector, which is, in this case, the automobile manufacturing, through a hybrid model. However, the sector in an input-output based system still includes the passenger car manufacturing processes, so that those inputs are mis-specified as 80% of passenger cars and only 20% trucks.

with transaction records between industries within a national economy.[2] Let us define the transaction matrix $\mathbf{Z}$ such that $(\mathbf{Z})_{ij}$ indicates the amount of domestic industry output purchased by industry j from domestic industry i in monetary terms. By assuming that each industry produces only one distinct output, we obtain a square transaction matrix $\mathbf{Z}$. It is a convention in input-output economics that the transaction matrix is converted into a coefficient matrix, which is generally called the direct requirement matrix. Let $\mathbf{g}$ be the total industry output vector such that $(\mathbf{g})_i$ shows the amount of the total output by industry i, which is the sum of the total output of the industry that is consumed by domestic industries, households and export. An industry-by-industry direct requirements matrix, $\mathbf{A}$, is then defined by

$$\mathbf{A} = \mathbf{Z}\hat{\mathbf{g}}^{-1}. \qquad (1)$$

The hat (^) in (1) makes a diagonal matrix out of a vector, such that $(\mathbf{g})_i$ is located at $(\hat{\mathbf{g}})_{ii}$ and $(\hat{\mathbf{g}})_{ij} = 0$, where $i \neq j$. An element of the direct requirements matrix $(\mathbf{A})_{ij}$ shows the amount of industry output i required by industry j to produce a unit of its output. An equality

$$\mathbf{g} - \mathbf{A}\mathbf{g} = \mathbf{f} \qquad (2)$$

holds in a national economy where the total amount of domestic industry output produced ($\mathbf{g}$) minus the total industry output consumed by domestic industries ($\mathbf{A}\mathbf{g}$) equals the amount of industry output consumed by final consumers and export ($\mathbf{f}$) (Leontief, 1941). Rearranging (2) gives

$$\mathbf{g} = (\mathbf{I} - \mathbf{A})^{-1}\mathbf{f} \qquad (3)$$

for non-singular $(\mathbf{I} - \mathbf{A})$. Assuming further that the input structure of each industry does not change when it changes its scale, meaning that input coefficients are scale-insensitive, the total amount of industry output $\mathbf{x}$ required by an arbitrary final demand for industry output $\mathbf{y}$ is calculated by

$$\mathbf{x} = (\mathbf{I} - \mathbf{A})^{-1}\mathbf{y}. \qquad (4)$$

The amount of industry-wide environmental intervention generated by an arbitrary final demand for industry output $\mathbf{y}$ is then calculated by

[2] Imports and capital investment have been omitted here for the sake of simplicity, but are dealt with in a later section.

$$\mathbf{q}=\mathbf{B}(\mathbf{I}-\mathbf{A})^{-1}\mathbf{y}, \qquad (5)$$

where **B** is the environmental intervention by industries matrix, in which an element $(\mathbf{B})_{ij}$ denotes the amount of environmental intervention *i* generated in producing a unit of output by industry *j* (*cf.* Ayres & Knees, (1969), p. 288; Isard (1968) and Leontief (1970)).

The basic computation of IOA described above is based on the assumption of one distinct output by each industry. In practice, however, each industry produces primary products and secondary products as well as scrap. Furthermore, the output by each industry does not have to be unique to that industry, so that the commodity produced by an industry may also be produced by another industry. This problem has led to theoretical improvements of input-output analysis toward commodity-based accounting. Input-output accounts based on commodity instead of industry output have been developed by improving the basic accounting scheme known as supply and use framework (Stone et al., (1963)). This supply and use framework then enables the creation of a commodity-by-commodity-based input-output model (see eg. ten Raa et al. (1984), ten Raa (1988), Kop Jansen & ten Raa (1990), Steenge (1990), Konijn (1994) and Londero (1999)).

3.2. Life Cycle Assessment (LCA)

A basic question in Life Cycle Inventory (LCI) is 'how much of environmental intervention is generated to fulfil a particular function?'. Therefore, LCA basically deals with physical, function-based systems with much higher resolution in terms of process interdependence than IOA. As in energy analysis, the computation of the total environmental intervention in LCI started with a process flow diagram approach, and this approach has remained the most common practice in LCA study and software tools (see eg., Fava et al. (1991), US EPA (1993), and Consoli et al. (1993)).

Process flow diagrams show how the processes of a product system are interconnected through commodity flows. In process flow diagrams, boxes generally represent processes, while arrows indicate the commodity flows. Using plain algebra, the amount of commodities required to supply a certain functional unit is obtained, and an LCI is calculated by multiplying by the amount of environmental intervention required to produce them. Although the process flow diagram approach is attractively simple, it has its limitations when dealing with a complex system, where both inputs and outputs are interconnected between processes, thus establishing many internal loops. Although a few techniques, including iterative methods and infinite geometric progression, can be used to solve this problem, the process flow

diagram approach is generally not adequate for a complex system (see Suh & Huppes (2001) for an overview).

A more flexible mathematical expression of process interrelations and its use has been introduced to LCI computation by Heijungs (1994). Heijungs' approach uses a commodity-by-process model based on physical flows between processes. The computational structure of LCA in Heijungs (1994) is further illustrated here by an example. A hypothetical system of toaster use is shown in fig. 1.

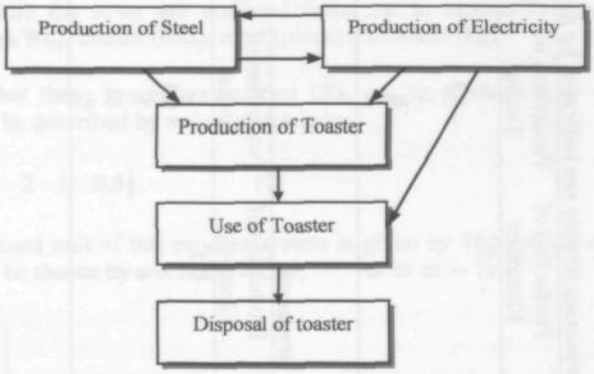

Figure 1. Process flow diagram with internal commodity flow loops.

The quantities of the commodity flows of each process are shown in table 1. In the product system shown in fig. 1 and table 1, one toaster is produced using 2 kg of steel and 0.1 kWh of electricity, after which it is used and then disposed of. Let us assume that such a toaster produces 1000 pieces of toast during its lifetime.

Note that the product system shown in fig. 1 and table 1 is already difficult to analyse using the process flow diagram approach, since it has internal loops between the processes of 'steel production' and 'electricity production'. The model by Heijungs (1994) can solve the LCI problem based on the physical

Table 1. Inputs and outputs of physical flows by processes (inputs are indicated by negative sign, outputs by positive)

	Production of Steel	Production of Electricity	Production of Toaster	Use of Toaster	Disposal of toaster
Steel (kg)	1	- 0.5	- 2	0	0
Electricity (kWh)	- 0.5	1	- 0.1	- 1	0
Toaster (unit)	0	0	1	- 1	0
Pieces of toast (piece)	0	0	0	1000	0
Waste (kg waste)	0	0	0	1	- 1

Table 2. Inputs and outputs of functional flows by processes

	Production of Steel	Production of Electricity	Production of Toaster	Use of Toaster	Disposal of toaster
Steel (kg)	1	- 0.5	- 2	0	0
Electricity (kWh)	- 0.5	1	- 0.1	- 1	0
Toaster (unit)	0	0	1	- 1	0
Pieces of toast (piece)	0	0	0	1000	0
Waste disposal service (kg disposal)	0	0	0	-1	1

flow relations between processes. The physical flows between the processes in table 1 can be summarised in matrix form by

$$\tilde{\mathbf{A}} = \begin{bmatrix} 1 & -0.5 & -2 & 0 & 0 \\ -0.5 & 1 & -0.1 & -1 & 0 \\ 0 & 0 & 1 & -1 & 0 \\ 0 & 0 & 0 & 1000 & 0 \\ 0 & 0 & 0 & 1 & -1 \end{bmatrix}. \qquad (6)$$

From left to right, the columns indicate steel production, electricity production, toaster production, the use of the toaster and the disposal of the toaster, while the rows are assigned from top to bottom to steel (kg), electricity (kWh), toaster (unit), toast (piece) and waste (kg).

Suppose that these processes generate CO_2 gas to produce their outputs, which can be described by a row vector in kg,

$$\tilde{\mathbf{B}} = \begin{bmatrix} 1 & 4 & 2 & 1 & 0.5 \end{bmatrix}. \qquad (7)$$

The functional unit of this product system is given by 1000 pieces of toast, which can be shown by a column vector,

$$\tilde{\mathbf{y}} = \begin{bmatrix} 0 \\ 0 \\ 0 \\ 1000 \\ 0 \end{bmatrix}. \qquad (8)$$

The total life cycle CO_2 emission by this product system is then calculated by

$$\tilde{\mathbf{q}} = \tilde{\mathbf{B}}\tilde{\mathbf{A}}^{-1}\tilde{\mathbf{y}} = 18.1 \qquad (9)$$

The contribution to the total CO_2 emission is distributed over the processes as shown in fig. 2.

Since the study by Heijungs (1994), a number of analytical tools and improvements have been developed for LCA computation, including the use of pseudo-inverse, perturbation analysis, etc., and a few software programs and databases have been created using the equation (9) (see Heijungs & Suh (2002)).

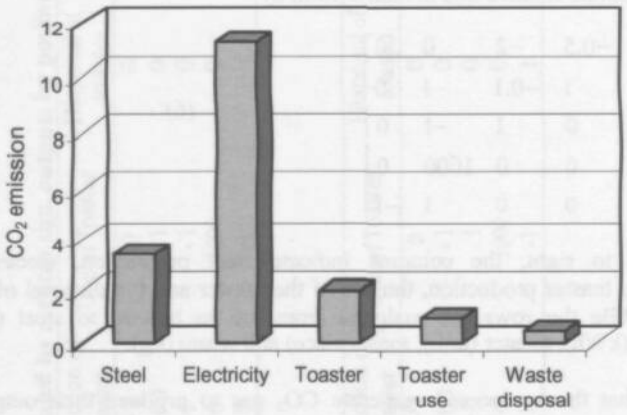

Figure 2. Result of process-based LCA – CO_2 contributions by processes

4. IOA and LCA for integrated hybrid models

It is important to note that both environmental IOA and LCA on their own run into serious problems as ecological-economic models for detailed environmental systems analysis. Although the input-output model covers a wider system, including all interactions between industries within a national economy, the result is an average value of a set of processes, while LCA also has a fundamental problem of truncation. Therefore, a model is required that reveals the microstructure of the important parts of a product system and, at the same time, covers the entire economic system.

As shown in the previous section, the systems that IOA and LCA deal with have a lot in common. Despite the similarities, however, the systems that LCA deals with also have more than a few important differences: there are no annual 'transaction' records available, quantities are in physical units, it concerns the direction of physical flows instead of that of money flows, it contains use and end-of-life stages, it primarily concerns the function of a system, etc. These differences provided enough reasons for LCA researchers to independently develop slightly different computational structures from that of IOA (see eg. Projektgemeinschaft Lebenswegbilanzen, 1991;

Heijungs, 1994; Heijungs and Suh, 2002).[3] Those unique features indeed make it difficult for an LCA to be directly integrated with IOA in current form (see the section 6). The rest of this section discusses the relevant formats and adaptations required to integrate IOA and LCA, for which I tried to reformulate the LCA model structure in the context of input-output economics' tradition but only with a different set-up namely, functional flow-by-process accounts.

The format of the input-output table used here is the commodity-by-commodity format derived from make and use matrices. The industry-by-industry format is less applicable in the current model, due to the aggregation of commodities in an industry output. Moreover, the industry that produces an input material for a process is generally less fully known to the LCA practitioners than the commodity itself. In order to distinguish our format from the industry-by-industry matrix – $\mathbf{A}$ in (4) – we use $\mathbf{A}'$ for the commodity-by-commodity direct requirements matrix.

Furthermore, the input-output technology coefficient matrix should include domestic and imported capital goods, as well as domestic and imported current products, such that

$$\mathbf{A}'_{*} = \mathbf{A}'_{DC} + \mathbf{A}'_{DK} + \mathbf{A}'_{IC} + \mathbf{A}'_{IK} . \qquad (10)$$

Matrices $\mathbf{A}'_{DC}$, $\mathbf{A}'_{DK}$, $\mathbf{A}'_{IC}$ and $\mathbf{A}'_{IK}$ are the commodity-by-commodity direct requirements matrices for domestic current products, domestic capital goods, imported current products and imported capital goods, respectively, with imported current and capital goods assigned to the relevant domestic indices. An assumption here is that the technology and the economic structure used to produce these imported products and capital goods are exactly the same as the domestic ones (see Lenzen (2001) for a comprehensive treatment).

Since the available input-output table is generally several years old, the prices should be rescaled to current price levels as well. The input-output technical coefficient matrix $\mathbf{A}'_{*}$ in (10) is rescaled to a coefficient matrix $\mathbf{A}'_{**}$ with current prices by

$$\mathbf{A}'_{**} = \hat{\mathbf{p}}\, \mathbf{A}'_{*}\, \hat{\mathbf{p}}^{-1} , \qquad (11)$$

[3] Many LCA case studies, databases and software tools developed and used are, however, based on Heijungs (1994) and Heijungs and Suh (2002).

where vector $\mathbf{p}$ shows the price ratio of each commodity between current and the year on which the input-output table is based. The input-output technology coefficient matrix used below refers to the matrix with price rescaling by (11). The environmental intervention-by-industry matrix $\mathbf{B}$ in (5) should also be adjusted to an environmental intervention-by-commodity matrix, $\mathbf{B}'_{**}$ by applying an allocation model and reflecting price differences in accordance with the procedure outlined above.

The LCA model shown in the previous section cannot be used directly for integration either. Here we introduce a computational structure of LCI, based on the supply-demand relationship of functional flows, that will be fully integrated with IOA in the next section.

LCA deals with the production and consumption of functions by processes (ISO, 1998). In this context, a *function* refers to a useful trait of a *commodity*, and a commodity may have multiple functions (*cf.* Lancaster (1966)). A shampoo, for instance, may have multiple functions, such as 'cleaning', 'conditioning', 'moisturising', 'protein supply', etc. In order to refer to a quantitative function flow, we will use the term *functional flow*. Since a function is the basis of computation in LCA, it means that if two shampoos are studied, they should be compared on the basis of equivalent function(s) by subtracting or adding additional function(s). A set of functions can also be collectively referred as *a* function if individual functions need not be distinguished. The level of resolution used in defining a function depends on the objective of the study. If it is unnecessary to distinguish all functions of a commodity, these functional flows can be represented by the flow of the commodity. In this respect, commodity flows can be good surrogates for functional flows in many cases, though not in all.

Let us define a *process* as a unit activity that produces function(s). In other words, each process produces at least one functional flow. A process exists because there is a *demand* for its functional flow from outside the process. We shall use the demand as the basis of the *imputation* of environmental intervention and input requirements. In this context, a process may refer to an industrial process as well as a household activity or a post-consumer activity (*cf.* Sen (1999)).

A process also demands functional flows produced by other processes for its operation. Production and consumption of functions by a product system can be expressed by a matrix $\tilde{\mathbf{Z}}_*$, of which a column, $(\tilde{\mathbf{Z}}_*)_j$ represents the amount of functional flows consumed and produced over a certain period of operation by process j being given in the relevant physical unit. Thus, a household process like the 'use of TV' may have 'hr of TV watching' as its

functional flow output and 'kWh of electricity' as an input. One clear advantage of using physical units is that functional flow relations between processes are not distorted by price fluctuations over time or across consuming processes.

In compiling the vector of functional flows of a process j, $(\tilde{\mathbf{Z}}_*)_j$, the production of functional flow is shown as a positive value, while consumption is given a negative sign. Note here that, although these flows are expressed in physical units, the direction of a flow may differ from that of the physical flow.[4] The direction of a waste flow, for example, is from industrial processes to waste treatment processes in terms of physical waste flows, while the direction may be the opposite in terms of functional flows, which may be 'kg waste treatment service'. (*cf.* Heijungs (1994)). Nevertheless, it is also possible that the waste treatment facility purchases the waste to produce other commodities such as heat or recycled products. In this case the waste become a functional output of the industrial process.

In most cases, except for household processes, the direction of a functional flow between two processes is clearly indicated by monetary transaction flows – if the waste treatment facility purchased the waste for, eg., its heat content, then the waste is no longer waste, but a functional output that has lower economic value. There are some cases in which the direction of a functional flow may be unclear from the monetary transaction flow. Suppose, for example, that a waste recycling process receives waste materials from a demolition process for free. In this case, there is no transaction flow between the two processes. The functional flows, however, can be understood to have both directions: the waste recycling process purchases the waste materials from the demolition process, and the demolition process purchases the waste treatment services from the waste recycling process at exactly the same price that they would have to pay to one another. We will refer to the relationship between processes in producing and consuming functional flows as a *supply-demand relationship* between the processes, and we will use this relationship in imputing functional flow inputs and environmental interventions by a process, i.e., the demand for a functional flow by a process will get not only the functional flow but also part of the inputs used and environmental interventions caused by the process in producing the functional flow.

We also make a *steady-state assumption* in compiling the vector of the functional flows of a process. We assume that processes are operated under complete steady-state conditions. In reality, of course, hardly any industrial or consumer process is operated under complete steady-state conditions –

[4] LCA case studies and databases, so far, are based on the direction of physical flows.

processes may be subject to changes in production volume and degradation in performance over time. The steady-state condition here, however, means that we look at a period of process operation that is long enough to cover all the abnormalities and short enough to represent current operating conditions, and that we distribute all these abnormalities homogeneously over a given period of time, resulting in an averaged typical input-output ratio for each process. In contrast to the input-output table, the absolute value of the time period chosen for each process may differ between processes. We define a vector called *basis period of steady-state approximation* $\mathbf{t}$, of which an element $(\mathbf{t})_i$ shows the size of the temporal window used for the steady-state approximation for process i.

Let $\tilde{\mathbf{Z}}_*$ be a functional flows by processes matrix such that $(\tilde{\mathbf{Z}}_*)_{ij}$ is the amount of functional flow i used or produced by process j during the period of time that has been determined as the basis of steady-state approximation for process j. Note that the matrix $\tilde{\mathbf{Z}}_*$ may have more than one positive value in each column, and may also be rectangular. A rectangular $\tilde{\mathbf{Z}}_*$ should be further treated to make it square. The rectangularity problem is generally caused by the difference between the row and column indices. The matrix $\tilde{\mathbf{Z}}_*$, for instance, has functional flows as its row indices and processes as its columns. The procedure to transform a functional flow-by-process matrix into a functional flow-by-production of *a* functional flow matrix is referred to as *allocation* here (*cf.* Heijungs & Frischknecht (1998), Weidema (2001)). Details of the allocation procedure in this context will not be dealt with here, but can be found elsewhere (Suh, 2001a). For the sake of simplicity, we assume that $\tilde{\mathbf{Z}}_*$ is square.

Since we have compiled $\tilde{\mathbf{Z}}_*$ by assuming that each process is operated under complete steady-state conditions, the choice of a temporal window of process operation that is smaller than the basis period of steady-state approximation will not make any difference for the ratio between each input and output. However, it is convenient to define a unit operation time for each process. The absolute value of the unit operation time for a process may vary across processes. A vector called *unit operation time* $\mathbf{u}$ is defined such that $(\mathbf{u})_i$ shows the unit operation time chosen for process i, where

$$\mathbf{t} \geq \mathbf{u}. \qquad (12)$$

For instance, the unit operation time can be chosen in such a way that the functional flow output by each process becomes 1 (see e.g., Heijungs

(1994)). The basis period of steady-state approximation can then be expressed in terms of the unit operation time, such that

$$\mathbf{t} = \hat{\mathbf{u}}\tilde{\mathbf{g}}, \qquad (13)$$

where $\tilde{\mathbf{g}}$ is a vector of time ratio by processes such that $(\tilde{\mathbf{g}})_i$ shows the unit operation time, $(\mathbf{u})_i$ as a ratio of basis period of steady-state approximation for process *i*. Rearranging (13) gives

$$\tilde{\mathbf{g}} = \hat{\mathbf{u}}^{-1}\mathbf{t}. \qquad (14)$$

We can now define the functional flow-by-process LCA technology coefficient matrix $\tilde{\mathbf{A}}_*$ by

$$\tilde{\mathbf{A}}_* = \tilde{\mathbf{Z}}_*(\hat{\tilde{\mathbf{g}}})^{-1}, \qquad (15)$$

where $(\tilde{\mathbf{A}}_*)_{ij}$ is the physical amount of functional flow *i* used or produced by process *j* during the unit operation time chosen. Again, a negative sign is assigned to the use of functional flow and a positive value to production. Note further that, unlike the input-output technology coefficient matrix, the LCA coefficient matrix has no values for self-consumption, which is located on the main diagonal of the intermediate part of an input-output table. The idea of self-consumption is in fact a statistical artefact, due to the level of aggregation in industry classification, which is not generally the case for LCA.[5] The amount of functional flow delivered outside the system during the basis period of steady state approximation is then calculated by

$$\tilde{\mathbf{A}}_*\tilde{\mathbf{g}} = \tilde{\mathbf{f}}. \qquad (16)$$

Note that an identity

$$\tilde{\mathbf{f}} = \tilde{\mathbf{Z}}_*\mathbf{i} \qquad (17)$$

holds, where $\mathbf{i}$ is a summation vector with only one in a relevant dimension, and $\tilde{\mathbf{f}}$ is the total production of functional flow. Rearranging (16) gives

[5] It also conflicts the assumption of only one homogeneous output per each sector, since it is not well imaginable for an industry to buy the same product that the industry produces (see Lenzen (2001) and Georgescu-Roegen (1971))

$$\tilde{\mathbf{g}} = \tilde{\mathbf{A}}_*^{-1}\tilde{\mathbf{f}} \qquad (18)$$

for non-singular $\tilde{\mathbf{A}}_*$. Assuming that the coefficients of technology coefficient matrix in (18) do not change as the amount of functional flow delivered outside the system changes, the amount of unit operation time $\tilde{\mathbf{x}}$ required to produce an arbitrary final demand for functional flow $\tilde{\mathbf{y}}$ is calculated by

$$\tilde{\mathbf{x}} = \tilde{\mathbf{A}}_*^{-1}\tilde{\mathbf{y}}. \qquad (19)$$

The total environmental intervention due to an arbitrary final demand is then given by

$$\tilde{\mathbf{q}} = \tilde{\mathbf{B}}\tilde{\mathbf{A}}_*^{-1}\tilde{\mathbf{y}}, \qquad (20)$$

where $\tilde{\mathbf{B}}$ is the environmental intervention by process matrix, of which an element $(\tilde{\mathbf{B}})_{ij}$ shows the amount of environmental intervention i generated by process j during its unit operation time. Equation (20) returns the amount of environmental intervention caused by the external demand for a particular functional flow of a product system using the imputation algorithm based on the supply-demand relationship.

5. Integrated hybrid LCA

In the previous section we have prepared formats and computational structures for the further integration of IOA and LCA. In this section we present the framework of a hybrid model that fully integrates the input-output and LCA computational structures.

We start by defining upstream and downstream cut-off matrices. The *upstream cut-off by processes* matrix is derived by dividing the total bill of goods for the inputs that are not covered by a processes in a process-based system during the period of steady-state approximation by the total unit operation time of each process. The *downstream cut-off by functional flow* matrix is derived by dividing the annual sales of functional flow – in physical units that are relevant to each functional flow – by the production of each total commodity. In matrix notation this becomes

$$\mathbf{C}^{\mathrm{u}} = \tilde{\mathbf{Z}}_*^{\mathrm{u}}\hat{\tilde{\mathbf{g}}}^{-1} \qquad (21)$$

and

$$\mathbf{C}^{\mathrm{d}} = \widetilde{\mathbf{Z}}_{*}^{\mathrm{d}} (\hat{\mathbf{g}}_{***})^{-1}, \qquad (22)$$

where $\widetilde{\mathbf{Z}}_{*}^{\mathrm{u}}$ denotes the total amount of the cut-off commodity flows by processes during the period of steady-state approximation in monetary terms, and $\widetilde{\mathbf{Z}}_{*}^{\mathrm{d}}$ denotes the amount of annual sales of functional flows from processes to input-output industries in relevant physical units (*cf.* equations (1) and (15)). The vector $\mathbf{g}_{***}$ shows total domestically produced and imported current and capital goods, with price levels updated for the difference with the base year, and with the portion of commodity flows represented by the process-based system subtracted (see Appendix). Note that the derivation of cut-off matrices has to be done in accordance with the type of basic price with which the transaction table has been compiled. If the basic transaction table is compiled on the basis of consumer's prices, then the bill of goods for each LCA process can be directly used to compile the upstream cut-off matrix. If the basic price type is the producer's price, the information from the bill of goods should be converted to producer's prices by subtracting the cost of transportation and the wholesale margin from the amount paid.[6] Skipping this procedure can introduce considerable levels of underestimation or overestimation in the final results.

The resulting upstream cut-off matrix $\mathbf{C}^{\mathrm{u}}$ is presented in such a way that $(\mathbf{C}^{\mathrm{u}})_{ij}$ shows the amount of cut-off of input-output commodity i to process j during the unit operation time, in monetary terms. Similarly, the downstream cut-off matrix $\mathbf{C}^{\mathrm{d}}$ is presented in such a way that $(\mathbf{C}^{\mathrm{d}})_{ij}$ shows the amount of cut-off flows of functional flow i to input-output commodity j per unit of monetary value of its output, in relevant physical units.

Now we are ready to present the basic balancing equation for integrated hybrid analysis:

$$\begin{bmatrix} \widetilde{\mathbf{A}}_{*} & -\mathbf{C}^{\mathrm{d}} \\ -\mathbf{C}^{\mathrm{u}} & \mathbf{I} - \mathbf{A}'_{***} \end{bmatrix} \begin{bmatrix} \widetilde{\mathbf{g}} \\ \mathbf{g}_{***} \end{bmatrix} = \begin{bmatrix} \widetilde{\mathbf{f}} \\ \mathbf{f}_{***} \end{bmatrix}, \qquad (23)$$

where $\mathbf{A}'_{***}$ denotes the commodity-by-commodity input-output technology coefficient matrix that includes domestic and imported current products and

[6] Default values for the transportation cost and wholesale margin can be found from a use table of input-output accounts.

capital, with prices updated to current levels, and excluding the portion of commodity flows already covered by the process-based system (see Appendix for the subtraction procedure) and. $\mathbf{g}_{***}$ and $\mathbf{f}_{***}$ stand for the total production and the final demand for domestic and imported current products and capital, respectively, with prices updated and with commodity flows already covered by the process-based system subtracted. Equation (23) shows that the amount of functional flow and input-output commodity produced, minus the amount used in the process-based system and in the input-output based system is equal to the amount delivered to the final consumers. Attention must be paid to the units of the coefficient matrix shown in (23), since the submatrices all differ from each other in terms of units. The LCA technical coefficient matrix $\widetilde{\mathbf{A}}_*$ is expressed in various physical units per unit operation time for each process, while the input-output technical coefficient matrix $\mathbf{A}'_{***}$ is in monetary units per unit output for each input-output commodity in monetary terms, $\mathbf{C}^{\mathrm{u}}$ is in monetary units per unit operation time for each process, and $\mathbf{C}^{\mathrm{d}}$ is in various physical units per unit of output for each input-output commodity in monetary terms. Rearranging (23) gives

$$\begin{bmatrix} \widetilde{\mathbf{g}} \\ \hdashline \mathbf{g}_{***} \end{bmatrix} = \begin{bmatrix} \widetilde{\mathbf{A}}_* & -\mathbf{C}^{\mathrm{d}} \\ \hdashline -\mathbf{C}^{\mathrm{u}} & \mathbf{I}-\mathbf{A}'_{***} \end{bmatrix}^{-1} \begin{bmatrix} \widetilde{\mathbf{f}} \\ \hdashline \mathbf{f}_{***} \end{bmatrix} \tag{24}$$

for a non-singular square matrix

$$\begin{bmatrix} \widetilde{\mathbf{A}}_* & -\mathbf{C}^{\mathrm{d}} \\ \hdashline -\mathbf{C}^{\mathrm{u}} & \mathbf{I}-\mathbf{A}'_{***} \end{bmatrix}.$$

Based on the linearity assumption we can further write

$$\begin{bmatrix} \widetilde{\mathbf{x}} \\ \hdashline \mathbf{x} \end{bmatrix} = \begin{bmatrix} \widetilde{\mathbf{A}}_* & -\mathbf{C}^{\mathrm{d}} \\ \hdashline -\mathbf{C}^{\mathrm{u}} & \mathbf{I}-\mathbf{A}'_{***} \end{bmatrix}^{-1} \begin{bmatrix} \widetilde{\mathbf{y}} \\ \hdashline \mathbf{0} \end{bmatrix}, \tag{25}$$

which gives the amount of unit operation time by processes and the amount of commodities by input-output based system for an arbitrary final demand for functional flow $\widetilde{\mathbf{y}}$. The value of $\widetilde{\mathbf{y}}$ shows the functional unit of an LCA study.

The amount of environmental intervention produced during the required unit operation time and the production of input-output commodities is calculated by

$$\overline{\mathbf{q}} = \left[\widetilde{\mathbf{B}} \;\vdots\; \mathbf{B}'_{***}\right]\begin{bmatrix}\widetilde{\mathbf{x}} \\ \hdashline \mathbf{x}\end{bmatrix}, \qquad (26)$$

where $\overline{\mathbf{q}}$ is the environmental intervention produced by the hybrid system, $\widetilde{\mathbf{B}}$ is the environmental intervention by processes matrix and $\mathbf{B}'_{***}$ is the environmental intervention by input-output commodities matrix (see Appendix). The overall computation of the integrated hybrid model is obtained by combining (25) and (26) as

$$\begin{aligned}\overline{\mathbf{q}} &= \left[\widetilde{\mathbf{B}} \;\vdots\; \mathbf{B}'_{***}\right]\begin{bmatrix}\widetilde{\mathbf{A}}_{*} & -\mathbf{C}^{d} \\ -\mathbf{C}^{u} & \mathbf{I}-\mathbf{A}'_{***}\end{bmatrix}^{-1}\begin{bmatrix}\widetilde{\mathbf{y}} \\ \mathbf{0}\end{bmatrix}, \qquad (27)\\ &= \overline{\mathbf{B}}\,\overline{\mathbf{A}}^{-1}\overline{\mathbf{y}}\end{aligned}$$

which represents a comprehensive ecological-economic model that integrates a functional-flow-based system with a commodity-based system. The bar ($\overline{}$) indicates integrated hybrid matrices and vectors. Equation (27) gives the total amount of environmental intervention resulting from the interaction between the functional-flow-based system and the commodity-based system in both directions, in one consistent mathematical structure.

6. Application

In this section we apply the model developed in the previous sections to a simplified example to show how the model can provide information that can be used for cleaner production and supply chain management. We start with the same example shown in figure 1 and table 1. The new technology coefficient matrix is given by

$$\widetilde{\mathbf{A}}_{*} = \begin{bmatrix} 1 & -0.5 & -2 & 0 & 0 \\ -0.5 & 1 & -0.1 & -1 & 0 \\ 0 & 0 & 1 & -1 & 0 \\ 0 & 0 & 0 & 1000 & 0 \\ 0 & 0 & 0 & -1 & 1 \end{bmatrix}. \qquad (28)$$

Table 3. Upstream cut-offs (in monetary units per unit operation time)

	Production of steel	Production of electricity	Production of toaster	Use of toaster	Disposal of toaster
Agricultural products ($)	0	0	0	0	0
Mining products ($)	0.1	0.01	0	0	0
Manufacturing products ($)	0.1	0.1	0	0	0
Construction ($)	0	0	0.1	0	0
Financial services ($)	0	0	0	0	0
Other products and services ($)	0	0	0.1	0	0.1

Table 4. Downstream cut-offs (in physical units per unit of production in monetary value)

	Agricultural products	Mining products	Manufacturing products	Construction	Financial services	Other products and services
Steel (kg)	0	0.015	0.01	0.05	0	0
Electricity (kWh)	0	0.05	0.08	0	0	0.01
Toaster (unit)	0	0	0	0	0	0
Toast (piece)	0	0	0	0	0	0
Waste Disposal service (kg)	0	0	0.05	0	0	0.03

Note that the technology matrix in table 2 is exactly the same as that in table 1 except for the changes in sign in the fourth and fifth column of the fifth row. That is due to the reformulation of the relationships between processes based on the supply-demand relations (see section 4). Although the differences between the two systems in table 1 and 2 seem to be negligible, these small changes not only allow a consistency in imputation mechanism over the whole system but also prevent an arbitrary result when integrated with an input-output table. Now suppose that the product system under study has the following upstream cut-offs (Table 3).

The economic system in which the product system in (28) is embedded is aggregated into 6 categories for simplicity: agricultural products, mining products, manufactured products, construction, financial services and other products and services. Table 3 shows the incoming commodity flows from this embedding economy to the processes that were previously neglected. For example, the production of 1 kg of steel uses 0.1 dollar worth of products that belong to the input-output commodities of mining products and manufacturing products in producer's prices. The monetary value of these cut-offs can be derived by dividing the total purchases during the basis period of steady-state approximation by the total unit operation time chosen for each process and subtracting the transportation cost and wholesale margin.

Suppose further that the product system also has downstream cut-offs (Table 4). Downstream cut-off shows that the functional flows produced by the processes are supplied not only within the process-based system but also outside the system. For example, the disposal process supplies its services not only to the toaster use process within the LCA system boundary but also to manufacturing products and other products and services.

$\mathbf{C}^u$ and $\mathbf{C}^d$ are then given by

$$\mathbf{C}^u = \begin{bmatrix} 0 & 0 & 0 & 0 & 0 \\ 0.1 & 0.01 & 0 & 0 & 0 \\ 0.1 & 0.1 & 0 & 0 & 0 \\ 0 & 0 & 0.1 & 0 & 0 \\ 0 & 0 & 0 & 0 & 0 \\ 0 & 0 & 0.1 & 0 & 0.1 \end{bmatrix} \qquad (29)$$

and

$$\mathbf{C}^{d} = \begin{bmatrix} 0 & 0.015 & 0.01 & 0.05 & 0 & 0 \\ 0 & 0.05 & 0.08 & 0 & 0 & 0.01 \\ 0 & 0 & 0 & 0 & 0 & 0 \\ 0 & 0 & 0 & 0 & 0 & 0 \\ 0 & 0 & 0.05 & 0 & 0 & 0.03 \end{bmatrix} \tag{30}$$

The matrix in (31) shows the input-output technology coefficient matrix in consumer's prices, with relevant pre-treatments, including the addition of domestic capital goods and imported current and capital goods, updated prices and subtraction of the flow covered by the process-based system.

$$\mathbf{A}'_{***} = \begin{bmatrix} 0.3 & 0.1 & 0 & 0 & 0 & 0.1 \\ 0.1 & 0.2 & 0.2 & 0.1 & 0 & 0.2 \\ 0.2 & 0.2 & 0.3 & 0.2 & 0.1 & 0 \\ 0.1 & 0.1 & 0.2 & 0.1 & 0.2 & 0.2 \\ 0.1 & 0 & 0 & 0.2 & 0.2 & 0.2 \\ 0.1 & 0.2 & 0.1 & 0.2 & 0.2 & 0.1 \end{bmatrix} \tag{31}$$

The matrix in (31) is a commodity-by-commodity aggregated technical coefficient matrix, its row and column indices being 1) agricultural products, 2) mining products, 3) manufactured products, 4) construction, 5) financial services, 6) other products and services (left to right and top to bottom). For instance, $(\mathbf{A}'_{***})_{23}$ is 0.2, which means that 0.2 dollars' worth of mining products are required to produce 1 dollar's worth of manufacturing product. The environmental intervention matrix showing the amount of CO_2 emission in kg per unit of input-output commodity output, adjusted for price differences and excluding those environmental interventions already covered by processes, is given by

$$\mathbf{B}'_{***} = [0.5 \quad 3 \quad 2 \quad 0.1 \quad 0.1 \quad 1]. \tag{32}$$

Now the process-based LCA system is ready to be integrated with the input-output table through upstream and downstream cut-offs. Equation (27) delivers the result, using the integrated hybrid system and taking into consideration the interactions between the process-based system and the input-output based system by

$$\overline{\mathbf{q}}=\left[\widetilde{\mathbf{B}} \;\vdots\; \mathbf{B}'_{***}\right]\left[\begin{array}{c:c} \widetilde{\mathbf{A}}_{*} & -\mathbf{C}^{d} \\ \hdashline -\mathbf{C}^{u} & \mathbf{I}-\mathbf{A}'_{***} \end{array}\right]^{-1}\left[\begin{array}{c} \widetilde{\mathbf{y}} \\ \hdashline \mathbf{0} \end{array}\right]=30.015, \qquad (33)$$

yielding a result that is about 66% higher than that of the process-based LCI in (9). The contributions to CO_2 emission by processes and input-output commodities are shown in fig. 3.

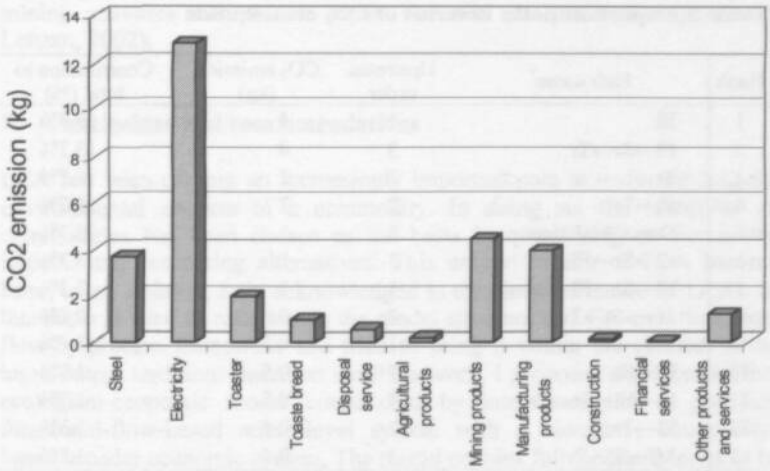

Figure 3. Result of hybrid LCA – CO_2 contributions by functional flows and input-output commodities

Figure 3 shows that cut-offs on mining and manufacturing products contribute a significant amount of life-cycle CO_2 emissions, which indicates the direction for further data collection efforts. The total CO_2 contribution by the process-based system is 20.027 kg and that by the input-output system is 9.988 kg, representing 67% and 33% of the total CO_2 contributions by the system, respectively. Note that the CO_2 contribution by the functional-flow-based system has also been changed relative to the result shown in fig. 2, due to the interaction between functional-flow-based system and input-output based system.

However, the difference in total CO_2 emissions between (10) and (33) is not to be regarded as a general value: adaptation of the input-output table can produce much smaller or much greater differences depending on the product

group studied and system boundary initially chosen. It is not the purpose of this example to generalise the typical amount of contribution by cut-offs.

The result can be further analysed using tools developed for LCA or IOA. We have performed a structural path analysis (Defourny & Thorbecke (1984)) as an example to show how the model can be utilised for cleaner production and supply chain management (see Suh (2003) for details on the structural path analysis of a hybrid system). The result is shown in table 5.

Table 5. Important paths in terms of CO_2 contribution

Rank	Path name*	Upstream order	CO_2 emission (kg)	Contribution to total (%)
1	El	1	4	13.3%
2	El→St→Tr	3	4	13.3%
3	Tr	1	2	6.7%
4	St→Tr	2	2	6.7%
5	Direct Emission	0	1	3.3%
6	El→St→El	3	1	3.3%
7	El→St→El→St→Tr	5	1	3.3%
8	*Mn*→St→Tr	3	0.6	2.0%
9	Wd	1	0.5	1.7%
10	El→St	2	0.5	1.7%
11	St→El→St→Tr	4	0.5	1.7%
12	El→Tr	2	0.4	1.3%
13	*Mf*→St→Tr	3	0.4	1.3%
	Sum		17.9	60%

* El: electricity, St: Steel, Tr: Toaster, *Mn*: Mining products, Wd: Waste disposal, *Mf*: Manufacturing products (italics for input-output commodities).

Table 5 lists the paths that contribute more than 1% of the total CO_2 emission by the product system. Six of the 13 paths end with 'electricity', while 7 start from 'toaster', which indicates that electricity production is an important direct polluter, while the production of the toaster is an important indirect pollution inducer. The path from 'steel' to 'toaster' in particular is identified as a strong linkage, as is also repeated in the list. The total direct and indirect contributions induced by the path from 'steel' to 'toaster' are indeed significant and are responsible for 49.4% of the total CO_2 emissions by the product system. From the perspective of cleaner production or supply chain management, the information shown in the right-hand side of the path is more important, since the controllability of the process operation or supply chain is much more limited in upstream processes. From this point of view, the result shown in figure 3, which shows the importance of the electricity

production process, provides only limited information, and structural path analysis helps to further identify directions for effective environmental impact reduction efforts, which could for instance include the use of steel in the toaster production process.

Structural path analysis also indicates directions for further data collection efforts. The most important path from the embedding economy identified is the use of mining product to produce steel, which is used in the toaster production in the third-order upstream path (rank 8). Thus, processes requiring closer attention in terms of data collection include especially the mining activities that provide inputs for steel production (compare with Lenzen, 2002).

7. Conclusions and recommendations

LCA has been playing an increasingly important role in understanding the environmental impacts of a commodity. In doing so, the 'function' of commodities has been chosen as the basis in quantifying environmental impacts and comparing alternatives. This unique feature of LCA has not been, to my opinion, fully acknowledged in the model structure of LCAs. In this paper, I tried to reformulate the model structure of LCA as a functional flow-by-process framework and tried to bring it within the context of the input-output tradition. Based on the framework, I proposed a comprehensive ecological-economic model constructed by inter-connecting a physical, functional-flow-based micro-level system with a monetary, commodity-based broader economic system. The model enables full feedback loops to be modelled, including inputs from the embedding economy to the detailed functional flow-based system and vice versa, which expands the system, preserves process specificity, and is useful for various applications, including cleaner production and supply chain management.

I would like to make a number of recommendations for LCA practitioners and database builders. First, in performing an LCI study, it is recommended to document at least the prices of cut-offs and the sales pattern of functional flows, which will allow later users to adopt the integrated hybrid model. Second, the use of the integrated hybrid model is recommended especially for comparative LCA studies. Equivalence of system boundaries has been one of the main obstacles in comparative studies (see eg. Hocking (1991) and Anonymous (1991)). The integrated hybrid model provides a fairly neutral and complete background system for LCA practitioners, enabling a comparative study on the basis of equivalent system boundaries.

Another recommended direction of research is building reliable and publicly available environmental intervention databases for the input-output table.

Although a number of national and international projects are in progress to incorporate environmental variables in national accounts, such as the National Accounting Matrix including Environmental Accounts (NAMEA), System of integrated Environmental and Economic Accounting (SEEA), the number of pollutants covered and the resolution of the commodity classification are rather limited for LCA purposes. Efforts are also being made by various research groups to build up publicly available databases (see eg., Suh (2001b), Suh (2004), Green Design Initiative (2002), Nansai et al. (2002)). For most countries, however, detailed, sectoral environmental statistics are still not available. Furthermore, reliable data at the national level may not be enough for many countries, due to the proportion of imports. Therefore, efforts should be made to develop a multi-national database.

The model developed here is also generally applicable to studies on broad inter-industry interdependence in which some part of the system deserves special attention, including analyses of impact by consumption, the role of specific technology in connection to its embedding economic system, substance flow analysis, Material Flow Analysis, etc.

Acknowledgements

I would like to thank Dr. Reinout Heijungs and Dr. Gjalt Huppes, both at Centre of Environmental Science (CML) in Leiden University, as well as the three reviewers, for their valuable comments.

Appendix

The input-output technology coefficient matrix derived by the equation (11) in the main text includes some of the functional flows already covered by the process-based system, especially when 1) a functional flow between two processes within a process-based system involves monetary transaction and 2) both of the processes belong to industries in the intermediate part of an input-output table. Therefore, in order to avoid double counting, these portions of the functional flows have to be subtracted from the input-output based system. If a functional flow satisfies neither of the two conditions above, the subtraction procedure is not necessary for the flow.

Since the input-output framework used for the integrated hybrid model is based on a commodity-by-commodity technology coefficient matrix, subtraction of the portions counted double is done at the level of make and use matrices.

Let us start with the functional flow records matrix, $\widetilde{\mathbf{Z}}_*$. If some of the basis periods used for steady-state approximation are other than one year, a diagonal matrix must be multiplied by the relevant values to adjust them all to one year periods. For our present calculations, we assume that $\widetilde{\mathbf{Z}}_*$, $\widetilde{\mathbf{Z}}_*^{\mathrm{u}}$ and $\widetilde{\mathbf{Z}}_*^{\mathrm{d}}$ have been compiled with a basis period of one year. Part of the functional flow-by-process matrix $\widetilde{\mathbf{Z}}_*$ is extracted to compose $\widetilde{\mathbf{Z}}_*^{\pi}$ such that $(\widetilde{\mathbf{Z}}_*^{\pi})_{ij}$ shows $(\widetilde{\mathbf{Z}}_*)_{ij}$ if the functional flow of *i* to process *j* satisfies the above mentioned two conditions, and 0 if not. We further divide $\widetilde{\mathbf{Z}}_*^{\pi}$ into two matrices, $\widetilde{\mathbf{V}}_*^{\pi}$ and $\widetilde{\mathbf{U}}_*^{\pi}$, such that

$$\left\{\widetilde{\mathbf{V}}_*^{\pi}\middle|(\widetilde{\mathbf{V}}_*^{\pi})_{ij}=(\widetilde{\mathbf{Z}}_*^{\pi})_{ji}\text{ if }(\widetilde{\mathbf{Z}}_*^{\pi})_{ji}>0,\text{ or 0 otherwise}\right\} \tag{A1}$$

and

$$\left\{\widetilde{\mathbf{U}}_*^{\pi}\middle|(\widetilde{\mathbf{U}}_*^{\pi})_{ij}=-(\widetilde{\mathbf{Z}}_*^{\pi})_{ij}\text{ if }(\widetilde{\mathbf{Z}}_*^{\pi})_{ij}<0,\text{ or 0 otherwise}\right\}. \tag{A2}$$

Clearly,

$$(\widetilde{\mathbf{V}}_*^{\pi})^{\mathrm{T}}-\widetilde{\mathbf{U}}_*^{\pi}=\widetilde{\mathbf{Z}}_*^{\pi}. \tag{A3}$$

Note that $\widetilde{\mathbf{V}}_*^{\pi}$ is a process-by-functional flow matrix and $\widetilde{\mathbf{U}}_*^{\pi}$ is a functional flow-by-process matrix. Let us further define an commodity-by-functional flow matrix $\mathbf{P}_{\mathrm{F}}$ such that

$$\left\{\mathbf{P}_{\mathrm{F}} \middle| (\mathbf{P}_{\mathrm{F}})_{ij} = 1 \text{ if functional flow } j \text{ belongs to commodity } i, \text{ or 0 otherwise}\right\}. \quad \text{(A4)}$$

Similarly, a process by input-output industry matrix $\mathbf{P}_{\mathrm{P}}$ is defined such that

$$\left\{\mathbf{P}_{\mathrm{P}} \middle| (\mathbf{P}_{\mathrm{P}})_{ij} = 1 \text{ if process } i \text{ belongs to industry } j, \text{ or 0 otherwise}\right\}. \quad \text{(A5)}$$

The matrices $\mathbf{P}_{\mathrm{F}}$ and $\mathbf{P}_{\mathrm{P}}$ are a functional flow permutation matrix and a process permutation matrix, respectively.

Let $\mathbf{U}_{**}$ be a commodity-by-industry matrix that shows the total use of domestic and imported current commodities and capital by domestic industries, with updated prices, and let $\mathbf{V}_{**}$ be an industry-by-commodity matrix that shows the total production of commodities by domestic industries, with updates prices. The portion of commodities consumed by the process-based system is then subtracted from the use matrix, $\mathbf{U}_{**}$ by

$$\mathbf{U}_{***} = \mathbf{U}_{**} - (\hat{\mathbf{m}}\mathbf{P}_{\mathrm{F}}\widetilde{\mathbf{U}}_*^{\pi}\mathbf{P}_{\mathrm{P}} + \hat{\mathbf{m}}\mathbf{P}_{\mathrm{F}}\widetilde{\mathbf{Z}}_*^{\mathrm{d}} + \widetilde{\mathbf{Z}}_*^{\mathrm{u}}\mathbf{P}_{\mathrm{P}}), \quad \text{(A6)}$$

where $\mathbf{m}$ denotes the price vector. The portion of commodities produced by the process-based system is also subtracted from the make matrix $\mathbf{V}_{**}$ by

$$\mathbf{V}_{***} = \mathbf{V}_{**} - \hat{\mathbf{m}}(\mathbf{P}_{\mathrm{P}})^{\mathrm{T}}\widetilde{\mathbf{V}}(\mathbf{P}_{\mathrm{F}})^{\mathrm{T}}. \quad \text{(A7)}$$

The commodity by commodity technology coefficient matrix derived by the reduced make and use matrix in (A6) and (A7), using a relevant model such as the industry-technology model or the commodity-technology model, shows the commodity flow relations, excluding those already covered in the process-based system. We use $\mathbf{A}'_{***}$ to denote the commodity-by-commodity input-output technology coefficient matrix that includes domestic and imported current products and capital, with prices updated to current levels, and excluding the portion of commodity flows already covered by the process-based system. Similarly, the environmental intervention-by-commodity matrix $\mathbf{B}'_{**}$ is reduced to $\mathbf{B}'_{***}$ by subtracting the environmental

interventions by processes that were represented in the input-output accounts.

References

_____, (1991) Letters, Science 252. 1361-1363

Ayres R.U., Ayres L.W., (1996). Industrial Ecology: Towards Closing the Materials Cycle. Edward Elgar Publishing, Cheltenham, UK.

Ayres R.U., Kneese A.V., (1969). Production, Consumption and Externalities, American Economic Review. LIX, 282-97.

Bullard C.W., Pillati D.A., (1976). Reducing uncertainty in energy analysis. CAC-doc. no. 205. Center for Advanced Computation, University of Illinois, Urbana. USA.

Bullard C.W., Penner P.S., Pilati D.A., (1978) Net energy analysis - handbook for combining process and input-output analysis. Resources and Energy 1, 267-313.

Consoli F., D. Allen, I. Bounstead, J. Fava, W. Franklin, A.A. Jensen, N. de Oude, R. Parirish, R. Perriman, D. Postlethwaite, B. Quay, J. Séguin, B. Vigon, (1993). Guidelines for Life-Cycle Assessment: A 'Code of Practice', SETAC. Brussels, Belgium.

Defourny J., Thorbecke E., (1984). Structural path analysis and multiplier decomposition within a social accounting matrix framework, Economic Journal 94, 111-136.

Engelenburg, B.C.W., van Rossum, T.F.M., van Block, K., Vringer, K., (1994). Calculating the energy requirements of household purchases: a practical step by step method, Energy policy, 22, 648-56.

US EPA, (1993). Life-cycle assessment: inventory guidelines and principles. EPA/600/R-92/245, US Environmental Protection Agency (EPA), USA.

Fava, J.A., R. Denison, B. Jones, M.A. Curran, B. Vigon, S. Selke, J. Barnum, (1991). A Technical Framework for Life-Cycle Assessment. SETAC, Brussels, Belgium.

Georgescu-Roegen, N., (1971). The Entropy Law and the Economic Process, Cambridge, Harvard University Press, USA.

Graedel T.E., Allenby B.R., (1995). Industrial Ecology, Prentice Hall, USA.

Green Design Initiative, (2002) Environmental Input-Output Life Cycle Assessment. Carnegie Mellon University, available at http://www.eiolca.net.

Guinée, J.B. (ed.), M. Gorree, R. Heijungs, G. Huppes, R. Kleijn, L. van Oers, A. Wegener Sleeswijk, S. Suh, H.A. Udo de Haes, J.A. de Bruijn, R. van Duin and M.A.J. Huijbregts., (2002). Handbook on life cycle assessment. Operational guide to the ISO standards. Kluwer Academic Publisher, Dordrecht, the Netherlands.

Heijungs, R., (1994). A generic method for the identification of options for cleaner products. Ecological Economics 10, pp.69-81.

Heijungs, R., Frischknecht, R., (1998). A Special View on the Nature of the Allocation Problem, Journal of Life Cycle Assessment 3 (5) 321-332.

Heijungs, R., Suh, S., (2002). Computational Structure of Life Cycle Assessment, Kluwer Academic Publisher, Dordrecht, the Netherlands.

Hendrickson, C., A. Horvath, S. Joshi, L. Lave, (1998). Economic Input-Output Models for Environmental Life Cycle Assessment. Environmental Science & Technology/News, April 1, pp. 184-190.

Hocking M.B., (1991). Paper versus Polystyrene: A Complex Choice. Science. 251 504-505.

International Federation of Institutes for Advanced Studies (IFIAS), (1974). Energy Analysis: Workshop on Methodology and Conventions. Report No. 6, Stockholm.

International Organisation for Standardisation (ISO), (1998). Environmental management-Life cycle assessment-Goal and scope definition and inventory analysis: ISO 14041. Geneva, Switzerland.

Isard, W., (1968). Some notes on the linkage of the ecologic and economic systems. Regional Science Association, XXII, Budapest, 85-96.

Joshi, S., (2000). Product Environmental Life-Cycle Assessment Using Input-Output Techniques. Journal of Industrial Ecology, 3 (2-3), 95-120.

Konijn, P.J.A., (1994). The make and use of commodities by industries-On the compilation of input-output data from the national accounts. Ph.D. thesis, University of Twente, Twente, the Netherlands.

Kop Jansen, P. and ten Raa, T., (1990). The choice of model in the construction of input-output coefficients matrices. International Economic Review, 31, pp. 213-27.

Lancaster, K. J., (1966). A new approach to consumer theory, The journal of political economy, 74 (2), 132-157.

Lave, L., E. Cobas-Flores, C. Hendrickson, F. McMichael, (1995). Using input-output analysis to estimate economy wide discharges. Environmental Science & Technology, 29 (9), 420-426.

Lenzen, M., (2001). A Generalized Input-Output Multiplier Calculus for Australia. Economic Systems Research, 13 (1), 67-92.

Lenzen, M., (2002). A guide for compiling inventories in hybrid life-cycle assessments: some Australian results, Journal of Cleaner Production, 10. 545-572.

Leontief, W.W., (1936). Quantitative Input and Output Relations in the Economic System of the United States. The Review of Economic Statistics, Vol. 18, No. 3. 105-125.

Leontief W.W., (1941). The Structure of American Economy, 1919-1939. An Empirical Application of Equilibrium Analysis. Oxford University Press, New York, USA.

Leontief, W.W., (1970). Environmental repercussions and the economic structure: An input-output approach. Review of Economics and Statistics, *LII(3), 261-71.*

Londero, E., (1999). Secondary products, by-products and the commodity technology assumption. Economic Systems Research 11 (2) 195-203.

Marheineke T., R. Friedrich, W. Krewitt. (1998). Application of a hybrid-approach to the life cycle inventory analysis of a freight transport task. Total Life Cycle Conference and Exposition, Austria.

Moriguchi Y, Y Kondo, H Shimizu, (1993). Analyzing the life cycle impact of cars: the case of CO_2. Industry and Environment, 16 (1-2), 42-45.

Nansai K, Moriguchi Y, Tohno S., (2002). Embodied Energy and Emission Intensity data for Japan Using Input-Output Tables (3EID) - Inventory data for LCA, Center for Global Environmental Research, Japan. *in press.*

Projektgemeinschaft Lebenswegbilanzen, (1991). Umweltprofille von Packstoffen und Packmitteln. Methode (Entwurf). ILV, München, Germany.

ten Raa, T., D. Chakraborty, J.A. Small, (1984). An alternative treatment of secondary products in input-output analysis. Review of Economics and Statistics. 66 (1) 88-97.

ten Raa, T., (1988). An alternative treatment of secondary products in input-output analysis: Frustration. Review of Economics and Statistics, 70 (3) 535-538.

Steenge, A.E., (1990). The commodity technology revisited-Theoretical basis and an application to error location in the make-use framework, Economic modeling, Vol. 7, 376-387.

Sen, A., (1999). Commodities and capabilities. Oxford University Press, Delhi, India.

Stone R., Bacharach, M., Bates, J., (1963). Input-Output Relationships, 1951-1966, Programme for Growth, Volume 3. London, Chapman and Hall, UK.

Suh S., (2001a). Generalised calculus of allocation in Life Cycle Assessment - Implications of economic models. CML Working Paper, CML, Leiden University, the Netherlands.

Suh S., (2001b). Missing Inventory Estimation Tool (MIET) version 2.0. CML, Leiden University, the Netherlands, available at http://www.leidenuniv.nl/cml/ssp/software/miet.

Suh S., (2003). Accumulative structural path analysis for life cycle assessment. CML Working Paper, CML, Leiden University, the Netherlands.

Suh S., (2004). A Comprehensive Environmental Data Archive (CEDA) version 3.0, CML, Leiden University, the Netherlands (http://www.leidenuniv.nl/cml/ssp/software/ceda).

Suh S., Huppes G., *In Press*. Techniques in Life Cycle Inventory of a Product. Journal of Cleaner Production.

Suh S., Huppes G., (2002). Missing Inventory Estimation Tool using extended Input-Output Analysis. International Journal of Life Cycle Assessment. 7 (3): 134-140.

Suh S., Lenzen M., Treloar G.J., Hondo H., Horvath A., Huppes G., Jolliet O., Klann U., Krewitt W., Moriguchi Y., Munksgaard J., Norris G. (2004). System boundary selection in Life Cycle Inventories using hybrid approaches, Environmental Science and Technology, 38 (3), 657-664.

Treloar, G., (1997). Extracting embodied energy paths from input-output tables: towards an input-output-based hybrid energy analysis method. Economic Systems Research 9 (4), 375-391.

Weidema, B.P., (2001). Avoiding co-product allocation in life-cycle assessment. Journal of industrial Ecology, 4 (3): 39-61.

Wilting, H.C., (1996). An energy perspective on economic activities. Ph.D. Thesis, University of Groningen. The Netherlands.

Worster, D., (1994). Natures' Economy: A History of Ecological Ideas. 2nd edition. Cambridge University Press, Cambridge, New York. USA.

IV. Database Building for Input-Output and Hybrid Life Cycle Assessment*

Abstract

Recently, Input-Output Analysis (IOA) is started to be applied to Life Cycle Assessment (LCA). In applying IOA to LCA studies, however, it is important to notice that there are both advantages and disadvantages. This paper aims a better understanding on both advantages and disadvantages in adopting IOA to LCA, and introducing method and principles of Missing Inventory Estimation Tool (MIET) as one of the approaches to combine the strengths of the process specific LCA and IOA. Additionally, we try to clarify a number of possible misuses of IOA for LCA purposes due to the confusion between industry output and commodity, consumer's price and producer's price, etc. MIET utilises 1996 US input-output table and various environmental statistics. It is based on explicit distinction between commodity and industry output. Adopting the result of MIET to existing process based LCI, LCA practitioners can fully utilise process specific information while expanding the system boundary. MIET will be continuously updated to reflect both methodological developments and up-to-date data sources. For supporting information see http://www.leidenuniv.nl/cml/ssp/software/miet

Keywords : cut-off; input-output analysis; IOA; LCI; MIET

* Reprint from "Suh, S., Huppes, H., 2002. Missing inventory estimation tool using extended input-output analysis, *International Journal of Life Cycle Assessment*, 7 (3) 134-140" under the courtesy of Ecomed Publisher.

1. Introduction

Life Cycle Inventory (LCI) is the most time- and resources-consuming phase in Life Cycle Assessment (LCA). Various efforts including streamlining techniques has been widely discussed to reduce the burden of LCI and maintain the quality of the result at the same time. Recent studies to use economic Input-Output Analysis (IOA) for LCA may be one of the directions of these efforts. Input-output table with relevant additional data can supply environmental information of economic activities based on a rather complete system boundary with relatively small amount of time and resources. Thus, an LCI result from input-output techniques has been generally regarded as a quick screening for more detailed study.

The approach of this work, however, started from the opposite side – Can IOA be used to make an LCA study more comprehensive? The prime merit of IOA is that input-output table covers the whole economic activities within a national border, so that its system boundary becomes rather complete. However, the completeness in system boundary is acquired at the cost of poor resolution in industry classification, several years of base year difference and loss of process-specificity. Thus, operational tools to combine process based LCA with IOA, preferably only the advantages of the two is required. As one of such tools, Missing Inventory Estimation Tool (MIET) is developed to support the process specific LCA by enlarging the system boundary toward a whole national economy and minimising the defects of IOA as much as possible.

MIET has been developed using US input-output table and various environmental statistics based on explicit distinction between commodity and industry output. Entering the estimated price of a missing flow either in producer's or consumer's price, MIET supplies inventory result for a missing flow as well as characterised results, using around 100 different impact assessment methods that are commonly used. Since the first release of MIET 1.1 in year 2000, MIET has been improved and updated. Now MIET 2.0 is available and being used in 29 different countries.

This paper aims a better understanding on both advantages and disadvantages in adopting IOA to LCA, and to introduce method and principles of MIET as one of the approaches to combine the strengths of the process specific LCA and IOA. Additionally, we try to clarify a number of possible misuses of IOA for LCA purposes due to the confusion between industry output and commodity, consumer's price and producer's price, etc.

This paper is organised as follows. In the next chapter we discuss the problem of system boundary selection practices in LCA and how IOA can solve the problem. Then we briefly show several approaches in adopting

IOA to LCA with their advantages and problems. In the subsequent chapter MIET methodology as well as its data sources is presented. Finally, limitations and future outlook of MIET are discussed.

2. Use of IOA to LCA

2.1. Problems of cut-off in LCA

Production of any functional output that LCA deals with involves near infinite number of processes through direct and indirect input/output relations. For example, a motor vehicle is produced using various parts and equipment, and this parts and equipment also require numerous raw and ancillary materials as well as energy and capitals and so on. This connection in 'commodity flow web' will be proliferated through upstream processes. Although the importance of flows may be tapered off as they reach far upstream indirect relations, the number of flows also drastically increases. In practice, LCAs only deal with a part of the processes - hopefully important ones – involved in the production of given functional output. In that sense, most, if not all, LCIs are truncated.

When ignoring some marginal processes, they should be proven to be negligible according to ISO standards (ISO, 1998). ISO suggests to use three criteria in determining those processes at the beginning of the iterative procedure [1]. Those criteria are 1) Mass, 2) Energy and 3) Environmental relevance. Among these three cut-off criteria, mass and energy are frequently used although mass is found to be a poor indicator in some case studies (eg. Suh, 2000). In general environmental relevance has very limited applicability to be considered as a cut-off criterion, since the very problem in selecting 'promising processes' is laying on the fact that the importance of the flows are normally not known before actual collection of detailed data - we should choose something on a basis we do not yet know.

One approach being used to solve this problem is based on the assumption of existence of reliable and facile traits that intimate overall environmental importance of a process. If such a trait exists for all processes, it can be directly employed as an efficient cut-off criterion. Raynolds *et al.* analysed mass and energy contents as such traits, and concluded that those two only can not give reliable information on the environmental significance of a flow [3]. In addition to mass and energy, Raynolds *et al.* combined economic factor in their system boundary selection procedure [3-4]. This approach seems to have a reasonable ground, since every cost driver involves certain economic activities, which are very likely to be related to environmental interventions.

However, considering diverging origins and large variability of environmental impacts, generalisation of the relationship between a few simple traits and overall environmental impacts based on a deductive inference could be dangerous.[1] Hunt *et al.* tested 10 different methods to streamline LCI and concluded that the validity of such traits can be judged only on a case-by-case basis [5].[2]

As long as we can not generalise the relationship between cut-off criteria and the magnitude of environmental consequences, it is difficult to justify any omission of flows, although it is required by ISO standards. Thus, it is necessary to somehow cover the omitted flows instead of cutting them off. On the other hand, it is, in practice, impossible to gather all the specific data for every single process involved in the production of a given functional unit. Therefore, a model is required that is simple enough to be operational and, at the same time, complex enough to represent the commodity flow web.

2.2. Input-Output Analysis (IOA)

One of such models is input-output account. Input-output account is a part of national accounts and is being used in most of countries in the world. Since, in principle, all transactions occurred within a country is recorded in an input-output table, the system boundary of IOA fully covers the whole range of national economic activities. An input-output table shows how much of inputs from industries are used to produce its own output of each industry. Each column of an input-output table consists of coefficients that represent the relative amount of inputs required to produce one dollar worth of output of an industry. By fixing this coefficients it is assumed that any magnitude of output of given industry will require inputs from other industries proportional to the fixed coefficients. Based on this assumption, total direct and indirect input requirements to fulfil certain external demand can be calculated.

In principle, the amount of total input requirements can be manually calculated by adding on stepwise upstream input requirements, as is being done in common LCI practices. For example, according to 1996 US input-output table, production of $1 output by 'Motor freight transportation and warehousing' industry requires $0.044 of 'Petroleum refining and related products' as one of direct inputs [6]. $1 of output from the industry 'Petroleum refining and related products' also requires $0.051 worth service from 'Motor freight transportation and warehousing' industry as one of

[1] Raynolds *et al.* also limited the application area of their method within common combustion related air emissions.

[2] *On the other hand, if there exists a reliable indicator perfectly correlated with overall* environmental consequences, the indicator is better to be utilised to calculate the inventory than cutting them off.

direct inputs. Assuming that these two industries produce only primary products, \$1 of service created by 'Motor freight transportation and warehousing' needs 0.044×0.051=\$0.0022 worth of indirect input from itself up to the second tier of this particular input path. This circulation will continue and will be tapered off at last. The amount of 'self requirement' in this particular path can be calculated analytically by $\sum_{n=1}^{\infty}(0.044 \times 0.051)^n$ which converges to \$0.00220485. However, under the complex industry interdependence in modern economy, each industry requires inputs from virtually all other industries, which complicates the commodity flow network especially due to those closed loop circulation and makes add-on type of calculation of total input requirements seem hopeless.[3]

W. Leontief elegantly solved this computational problem using a few assumptions and simple matrix inversion, now known as the Leontief multiplier [7]. The solution model of Leontief can be summarised as a system of non-homogeneous equations (1).

$$
\begin{aligned}
&a_{11}x_1 + a_{12}x_2 + a_{13}x_3 + \cdots + a_{1j}x_j + \cdots + a_{1m}x_m - y_1 = 0 \\
&a_{21}x_1 + a_{22}x_2 + a_{23}x_3 + \cdots + a_{2j}x_j + \cdots + a_{2m}x_m - y_2 = 0 \\
&a_{31}x_1 + a_{32}x_2 + a_{33}x_3 + \cdots + a_{3j}x_j + \cdots + a_{3m}x_m - y_3 = 0 \\
&\cdots\cdots\cdots\cdots\cdots\cdots\cdots\cdots\cdots\cdots \\
&a_{i1}x_1 + a_{i2}x_2 + a_{i3}x_3 + \cdots + a_{ij}x_j + \cdots + a_{im}x_m - y_i = 0 \\
&\cdots\cdots\cdots\cdots\cdots\cdots\cdots\cdots\cdots\cdots \\
&a_{m1}x_1 + a_{m2}x_2 + a_{m3}x_3 + \cdots + a_{mj}x_j + \cdots + a_{mm}x_m - y_m = 0
\end{aligned}
\tag{1}
$$

x_i is the total quantity of the ith industry output produced, and y_i is the quantity of the ith industry output consumed by non-industry consumers. Off-diagonal elements of $a_{ij}x_j$, which are generally non-positive are the quantity of the ith industry output used to produce the jth industry output. The case of $i = j$, that is diagonal elements of $a_{ij}x_j$, represent the quantity of net production from each industry which have positive sign. The set of equations in (1) says total industry output produced equals the total industry output consumed by industry and end consumers. This can be rewritten as;

$$\sum_{j=1}^{m} a_{ij}x_j - y_i = 0, \tag{2}$$

[3] If every industry has N number of inputs then the number of input paths at nth tier of upstream will be N^n. For example, the number of input paths up to 5th order of upstream tier will be 100,000 if each industry has only 10 inputs from others.

with,
$-1 < a_{ij} < 0$, for all $i \neq j$, $0 < a_{ii} \leq 1$, $y_i > 0$ for all i ($i, j=1,\cdots,m$).
Or briefly,

$$\mathbf{Ax} - \mathbf{y} = \mathbf{0}. \quad (3)$$

The technology matrix **A** shows the inter-industry interdependence of the economy in given area and time. We can calculate industry wide total requirements, **x** required to meet arbitrary final demand, **y** by

$$\mathbf{x} = \mathbf{A}^{-1}\mathbf{y}. \quad (4)$$

The inverse matrix, $\mathbf{A}^{-1}$ is known as Leontief multiplier. Leontief multiplier shows the amount of industry output required to produce a unit of each industry's output.

2.3. Approaches to adopt IOA to LCA

Since 1960s the use of Input-Output Analysis (IOA) for environment-related analysis has been attempted by various researchers including Leontief, the founder of IOA [8-11]. Application of IOA to LCA started from early 90s. Dohnomae utilised the completeness of upstream system boundary definition of Japanese input-output table for LCA types of application [12]. Using the general formula shown in equation (5), economy wide environmental emissions per arbitrary final demand y has been calculated [12].

$$\mathbf{M} = \mathbf{PA}^{-1}\mathbf{y} \quad (5)$$

M denotes direct and indirect environmental intervention due to arbitrary final demand **y**, and matrix, **P** gives direct pollutant emissions per a dollar worth of output of each sector. Later, this line of approach has been further improved using more comprehensive environmental data in US [13].

However, the coarseness of commodity classification in national input-output table implies inherent difficulties in utilising the result in higher level applications such as process improvement and chain management which are main application area of LCA. Therefore, Karna *et al.* (1994) disaggregated a part of input-output accounts to avoid this drawback and used disaggregated input-output table for LCA of newsprint [14]. Later, Joshi (2000) followed this approach in comparing steel and plastic fuel tanks [15].

Another line of approaches has been formalised in the field of energy analysis. Bullard and Pillati (1976) and Bullard et al. (1978) combined process based energy analysis similar to process based LCA with IOA to calculate net energy requirements of the US economy [16-17]. By doing so

energy analysts could expand the system boundary and preserve process specific information as much as possible (see e.g. Wilting, 1996). This type of approach will be called as 'tiered hybrid' method here.

2.4. Problems of applying IOA to LCA

Although IOA can enhance the system boundary completeness of an LCA study, there are also problems. An important problem in applying IOA to LCA is that, data supplied by input-output based analysis is generally poor in most aspects of data quality requirements except for system boundary completeness. Even the system boundary completeness can be challenged if the product system under study heavily relies on imported goods. Furthermore the commodity classification is not fine enough for the use of LCA. Lave *et al.*, (1995) already addressed the inability of input-output approach for detailed LCA. Since even the most detailed input-output table combines different commodities in one classification, input-output based analysis can provide comparisons only at a generic sector level [19]. Therefore, input-output based techniques are inadequate for analysis like identification of key processes or chain management within the same industry classification. Another problem is that collecting transaction records and balancing them requires significant amount of work depending on the size of the economy, so that statistical offices usually publish input-output table with several years of time lag.

Inconsistencies of industry classification between input-output table and environmental emission data are another source of error in input-output based part of an analysis. For example, US input-output table has been compiled using the industry classification by Department of Commerce (DOC), while environmental emission statistics are compiled using various other classification systems including Standard Industry Classification (SIC). This difference often leads subjective choices. For instance, in case an SIC code is represented by two industry classification code in input-output table, then the environmental data based on the SIC code should be divided into two, which requires assumptions such as economic output based allocation.

There is a methodological problem as well. In equation (5) matrix **A** can be either industry-by-industry matrix or commodity-by-commodity matrix. In case **A** is industry-by-industry table, **y** should also be the final demand on industry output. The utility of the information on an industry output, which may include various different functionality, is very limited, since in US, for instance, up to 77.8% of market share of each commodity is dependant upon industries that are not producing the commodity as primary product, and the portion of secondary products produced by an industry can be up to 88.6% of the total industry output in monetary terms [20]. This problem will be further discussed in the next chapter.

In case **A** in (5) is commodity-by-commodity matrix, still there is a problem. Given the fact that environmental data is complied based on the establishment classification instead of the commodity classification, the column index of the environmental intervention matrix, **P** in (5) will be industries rather than commodities. Then the operation in (5) is not congruent, since **P** is environmental intervention-by-industry matrix, while $\mathbf{A}^{-1}$ is commodity-by-commodity matrix.[4] This is exactly the same situation when LCA practitioners face allocation problem due to multifunctionality. So far these problems have been barely noted in literatures on input-output based LCA.

3. Method

3.1. MIET methodology

MIET is designed to support process specific LCA using tiered hybrid method and, at the same time, avoiding problems discussed so far. The general strategy of MIET is to minimise the use of input-output based data for major processes by restricting its application only within the flows located at the margin of the system boundary, so that process specific data can be utilised as much as possible and the system boundary is expanded at the same time.

Secondly MIET utilises supply and use framework to cope with allocation problem. The original work by Leontief does not provide information on 'commodity', but only on 'industry output', which contains secondary products, by-products, as well as primary products. From the perspective of LCA the utility of information on industry output is rather unclear, since LCA is a function-based evaluation system regardless where the commodity is being produced, and furthermore, the amount of secondary products and by-products in an industry output is considerable [20]. Thus, explicit distinction between industry output and commodity was needed, and this was done by introducing supply and use framework. The supply and use framework was developed with integral contribution by R. Stone for which he received the Nobel prize in 1984. This distinction requires assigning input requirements and pollutant emissions of an industry over its multiple commodity output, of which the situation is very similar to multifunctionality problem in LCA.

Since the System of National Accounts (SNA) [21], most countries in the world have employed supply and use framework for their national accounts system. In US department of commerce has been preparing supply and use

[4] Interestingly neither of these two problem has been mentioned in literatures describes input-output based LCA including [16-20].

matrices since 1972. The utility of supply and use framework is that firstly, this framework greatly improves the statistical quality, because the products and services used and produced by each establishment are better known than the industries where they came from. Secondly, this framework gives explicit distinction between commodity and industry output, which enables appropriate treatment of secondary products, by-products and scrap. From the LCA's perspective, the supply and use framework shows greater utility of input-output accounts, and devises appropriate ground for further allocation options.

In input-output economics, three allocation models and one mixture of the three models are generally used under the supply and use framework. They are commodity-technology model, industry-technology model, by-product technology model and mixed technology model. MIET utilises commodity-by-commodity total requirements matrix derived from supply and use table using either commodity-technology assumption or industry-technology assumption. The Detailed calculus used to derive the total requirement matrix can be found in Stone *et al.* 1963 and US DOC, 1998 [22-23]. These models will be briefly discussed below.

Industry-technology model assumes that the total environmental intervention by industry is proportionally assigned to its primary and secondary products based on their economic value. This method utilises market share matrix, **D** which is provided by Bureau of Economic Analysis (BEA) as a part of national account. Direct and indirect environmental intervention by arbitrary final demand on commodity **y** is then calculated as equation (6).

$$\mathbf{M}=\mathbf{PDA}^{-1}\mathbf{y} \qquad (6)$$

This method is fully in line with what is called partitioning method in LCA allocation.

The other method is based on the assumption that each commodity has its own characteristics in generating environmental interventions irrespective of industry where it is produced. Then the environmental intervention of a primary product of an industry is calculated by subtracting the amount of environmental intervention by secondary products referring to the industries that produce the secondary products as primary products. This method follows exactly the same reasoning with the substitution method in LCA allocation. The proof and calculation of this method is complicated and will not be treated further here, but can be found in [24]. MIET has been calculated using both methods. For the detailed discussion on the allocation models in IOA and its implication for LCA, see Suh (2001b) [25].

A practical problem which is often neglected concerns the monetary

presentation in IOA. Generally, input-output table is calculated based on producer's price due to a number of reasons, but the price information that LCA practitioners can get from procurements records is consumer's price. By using consumer's price input-output based LCIs will always result in underestimation. Calculation of consumer's prices requires data on retail and wholesales margin and transportation cost which is not generally known to purchasers.

MIET devised default values for retail and wholesales margin and transportation cost of each commodity within its calculation program so that consumer's price can be directly used for estimation. Therefore, MIET only requires estimated price of missing flows expressed in 1996 US dollar to show both inventory and characterised results of the missing flow. However, note that, if it is possible to get, producer's price delivers better estimates.

3.2. Compilation of environmental data

The environmental intervention matrix, **P** as required to construct equation (6) was compiled using various information sources, including Toxic Releases Inventory (TRI) 98, Air Quality Planning and Standard (AIRS) data of US Environmental Protection Agency (EPA), Energy Information Administration (EIA) data of US Department of Energy (DOE), Bureau of Economic Analysis (BEA) data of US DOC, National Center for Food and Agricultural Policy (NCFAP) and World Resources Institute (WRI) data [26-37]. These sources are the most up-to-date ones and some of the data sources have been significantly improved very recently. For example, US EPA recently released TRI 98 where seven more sectors were newly added, and those new sectors was calculated to be responsible for 67.4% of total toxic releases by mass. The overall environmental intervention matrix compilation procedure is illustrated in Figure 1. In order to enhance the manageability of such a large database, collected data are divided into 5 data modules according to the data sources and characteristics. Data modules and their data sources are summarised in Table 1.

First, annual environmental interventions generated by industries are compiled within each module. Greenhouse gas emissions by industry are compiled mainly using EIA and BEA data. US Department of Energy (DOE, 2000a) provides CO_2 emission data by most of the manufacturing industries due to energy use [28]. Missing data in DOE (2000a) are estimated using fuel use data and emission factors [27, 29, 31-32]. CO_2 emission by non fuel use including cement manufacturing, lime manufacturing and steel making are added to corresponding industries referring to DOE (1999) [27]. CO_2 emission by Flue Gas Disulfurisation (FGD) facilities are distributed and added to each industry's annual emission inventory based on energy use by

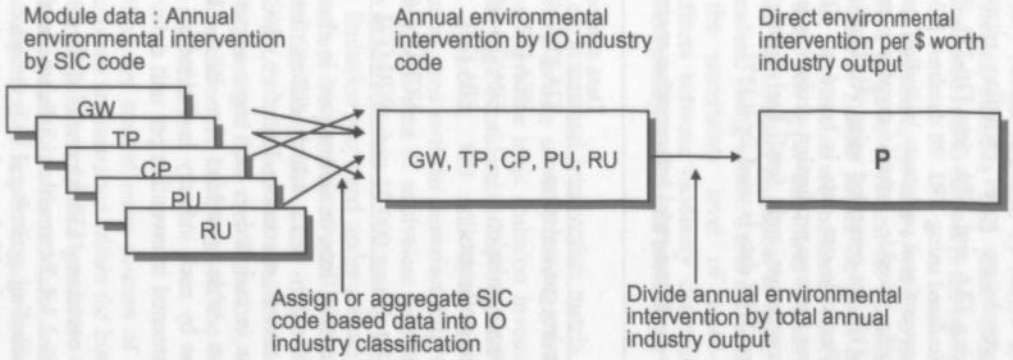

Figure 1. Overall procedure of environmental intervention matrix compilation

industries referring to DOE (1997) [29]. CO_2 emission by industries other than manufacturing is calculated based on fuel use data supplied by BEA which contains end use fuel consumption data on 9 major fuels in monetary term [32]. Fuel consumption data is converted into physical units by applying price data for different fuel and consumer types referring to DOE (1998) and CO_2 emission by industry is derived by multiplying emission factors by DOE (1999) [26-27]. Other greenhouse gases including nitrous oxides and methane are compiled using EIA and EPA data [30-31]. Toxic pollutants emission by industry is calculated using TRI 98 database [33-34]. Stationery and mobile emission of conventional pollutants including carbon monoxide, nitrogen dioxide, lead, sulfur dioxide, volatile organic compounds (VOC) and particulate matter (PM10) are compiled using Air Quality Planning and Standard database [35]. Pesticide use data is based on NCFAP data [36] which contains pesticide use for crop production excluding forestry and other use of pesticides. For resource use, only fossil fuel resources extraction is considered in this study, and WRI data is used for it [37].

Table 1. Data sources for environmental intervention matrix of US.

Data module	Contents	Data sources
GW	Global warming gas emission	EIA [26-30], EPA [31], BEA [32]
TP	Toxic pollutants emission	EPA [33-34]
CP	Conventional pollutants emission	EPA [35]
PU	Pesticide use	NCFAP [36]
RU	Resources use	WRI [37]

Resulting annual environmental intervention matrix is classified based on Standard Industry Classification (SIC) which differs from the industry classification used in national accounts. Therefore, SIC based annual environmental intervention is assigned to each input-output code based on the standard comparison table provided by BEA. Finally, annual environmental intervention by each industry is divided by annual industry output to produce environmental intervention per unit dollar worth industry output, **P**.

The resulting matrix, **P** contains 1170 kinds of different environmental interventions ranging from 1,1,1,2-tetrachloro-2-fluoroethane to Ziram, and includes air, water, soil(including agricultural soil) emissions and fossil fuel resources extraction. Since required information now is given, calculation of total direct and indirect environmental intervention by commodities in equation (6) is straightforward.

4. Limitations of MIET

Since MIET utilises input-output technique, shortcomings pertinent to input-output technique are also applicable to MIET. Shortcomings in terms of validity relate mainly to the high level of aggregation for LCA application, and the inventory results supplied by MIET are products of input-output data, environmental statistics and price estimation for missed flows. Credibility of the result is also subject to the uncertainty of those source data.

Sebald (1974) calculated upper and lower bounds of variability for Leontief multiplier given a range of deviation for all elements of technology matrix [38]. The approach of Sebald shows the worst case uncertainty of Leontief multiplier in that all elements are indicating maximum or minimum possible deviation at a time. The upper and lower bounds study showed astronomical uncertainty level for Leontief multiplier to such an extent that the result of IOA appears useless. Using Monte Carlo method, Bullard and Sebald (1988) re-examined the uncertainty level of input-output model. Admitting cancellation effects between randomly determined negative and positive elements, Leontief multiplier showed much lower variability level (-1%~4%) [39].

Although the environmental intervention matrix is comprehensive and has employed most up-to-date sources, there are several limitations. TRI 98 is one of the most extensive toxic emission inventory databases in the world and has gone through considerable improvement in its coverage of industry very recently. However, TRI still does not include the service and agricultural sectors, and even in manufacturing sectors, establishments that have less than 10 full-time or equivalent employs and processes less than 25,000 pounds or use less than 10,000 pounds of any listed chemical are not included. This limitation may lead underestimation for sectors like 'plating and polishing' where the portions of small and medium sized enterprises are considerable. In this study, also some of the environmental interventions considered relevant in LCA are not considered. They are noise and odor, radioactive substances and land use. Therefore, the result of the assessment using current data can not be used to assess the consequence of these missed environmental interventions.

Additionally, there are several more sources of validity problem. National input-output accounts are restricted within the boundary of a country, so that upstream relations linked to imported goods are not included. In this study, imported goods are assumed to be produced using the same technology of US. Although the portion of import is quite limited in the US economy, for some sectors dependent upon imported goods, this can introduce considerable uncertainty.

The temporal difference between data compilation and current process operation is another source of validity problem. MIET is based on 1996 US input-output table. Generally, the most recent input-output table and environmental data available are several years old ones while the flow that are to be estimated is currently being produced. For sectors that have grown and restructured rapidly, this may imply quite different input-output characteristics as well as environmental emissions. Although overall reliability of MIET is considered to be reasonably acceptable, for some sectors and environmental interventions the results may still show considerable underestimation. Hence, result of MIET should be considered as a lower bound of environmental consequences and shall be used only for the missing flows for which better data is not available.

Finally, current MIET methodology assumes that there are no interactions between process-based system and input-output based system. In other words, LCA parts and input-output parts are not really connected with each other but, simply the results from the input-output part are added to LCI result. By doing so the interactive relationship between processes in LCA system boundary and industries in input-output system can not be properly described.

5. Future outlook

MIET has been developed specifically for missing inventory estimation based on explicit distinction between commodity and industry output, and the most recent data sources have been utilised. However, the current version of MIET is not yet a complete version. It will be continuously updated to reflect both methodological developments and up-to-date data sources.

One of the main lines of recent methodological development in utilising IOA to LCA is hybrid analyses [14-15, 40-42]. Hybrid LCA methods can be divided into tiered hybrid, input-output based hybrid and LCA based hybrid methods. Current set-up of MIET is designed to assist tiered hybrid approach supplying background data. As was pointed out in the previous section, tiered hybrid method is generally unable to model the interactions between cut-off part and the LCA system. Suh and Huppes (2000) developed a framework to overcome this problem by combining input-output and LCI computational structure [41]. Flows in the input-output system are expressed in terms of their monetary values normalised by total production, while technology matrix of LCI comprises physical flows, normalised by their operation time. Suh and Huppes showed that, despite the difference, those two system can be fully inter-linked, if a few conditions are imposed, and the interaction between the two can be simulated. Suh (2001c) further improved this model by intoducing supply and use framework for both LCA and input-

output system [42]. In order to reflect these methodological aspects to MIET, new software, which should be able to provide functions for the hybrid analyses, is required.

In a slightly longer time horizon, MIET will be expanded to include more geographical units. An international consortium to establish regionalised international input-output tables with environmental extension has been launched [43]. In addition to the US table, Japan, Australia and the Netherlands will firstly be covered by the international consortium. Resulting data will be soon included in MIET.

References

[1] ISO, 1998: Environmental management - Life cycle assessment - Goal and scope definition and inventory analysis, ISO 14041, Geneva, Switzerland.

[2] Suh, S., 2000: Integrating cost information into alternative evaluation system for pollution prevention - An application of life cycle assessment and total cost assessment for an electromagnetic filtering device, Ajou University, Korea: downloadable at http://www.leidenuniv.nl/cml/ssp/staff/Thesis-full.pdf.

[3] Reynolds, M., F. Roydon, D. Chckel, 2000a: The relative mass-energy-economic (RMEE) method for system boundary selection, Part I: A means to systematically and quantitatively select LCA boundaries, Int. J. LCA 5 (1) 37-46.

[4] Reynolds, M., F. Roydon, D. Chckel, 2000b: The relative mass-energy-economic (RMEE) method for system boundary selection, Part II: Selecting the boundary cut-off parameter (Z_{RMEE}) and its relationship to overall uncertainty, Int. J. LCA 5 (2) 96-104.

[5] Hunt, R.G., T.K.Boguski, K.Weitz, A.Sharma, 1998: Case studies examining LCA streamlining techniques, Int. J. LCA 3 (1) 36-42.

[6] Okubo, O., A.M. Lawson, M.A. Planting, 2000: Annual Input-Output Accounts of the U.S. Economy, 1996, Bureau of Economic Analysis, Department of Commerce, Washington D.C., U.S.

[7] Leontief, W.W., 1936: Quantitative Input and Output Relations in the Economic Systems of the United States The Review of Economic Statistics, 18 (3) 105-125.

[8] Isard, W., 1968: Some notes on the linkage of the ecologic and economic systems, Regional Science Association, XXII, Budapest, 85-96.

[9] Ayres, R. U., Kneese, A. V., 1969: Production, Consumption, and Externalities, The American Economic Review, 59 (3) 282-297.

[10] Leontief, W., 1970: Environmental Repercussions and the Economic Structure: An Input-Output Approach, Review of Economics and Statistics, 52 (3) 262-271

[11] Victor, P., 1972: Economics of Pollution, Macmillan, Great Britain.

[12] Dohnomae, H., M. Tani, K. Shibata, M. Okumura, 1994: Input-output approach for Life-Cycle Assessment, International Conference on EcoBalance, Japan, 137-42.

[13] Hendrickson, C., A. Horvath, S. Joshi, L. Lave, 1998: Economic Input-Output Models for Environmental Life Cycle Assessment, Environmental Science & Technology, News, April 1, 184-190.

[14] Karna, T., T. Pajula, T. Kutinlahti, 1994: Life cycle analysis of newsprint, Proceedings of the 1st PPI Recycling Conference, London, Nov 8-10.

[15] Joshi, S., 2000: Product Environmental Life-Cycle Assessment Using Input-Output Techniques, Journal of Industrial Ecology, 3 (2-3) 95-120.

[16] Bullard, C. W., Pillati, D. A. 1976: Reducing uncertainty in energy analysis, CAC-doc. no. 205, Center for Advanced Computation, University of Illinois, Urbana. USA.

[17] Bullard C.W., Penner P.S., Pilati D.A., 1978: Net energy analysis - handbook for combining process and input-output analysis. Resources and Energy 1, 267-313.

[18] Wilting, H.C. 1996: An energy perspective on economic activities, Ph.D. Thesis, University of Groningen. The Netherlands.

[19] Lave, L. B., E. Cobas, C. Hendrickson, F. McMichael, 1995: Using Input-Output Analysis to Estimate Economy-wide Discharges, Environmental Science & Technology, 29 (9) 420-426.

[20] Miller, R., Blair, P., 1985: Input-Output Analysis: Foundations and Extensions, Prentice-Hall, Englewood Cliffs.

[21] UN, 1968: A System of National Accounts Studies in Methods, Series F, No. 2 Rev. 3, United Nations, New York.

[22] Stone, R., Bacharach, M., Bates, J., 1963: Input-Output Relationships, 1951-1966, Programme for Growth, Volume 3, London, Chapman and Hall.

[23] US Department of Commerce, 1998: Benchmark input-output accounts of the United States, 1992, Industry Economics Division, Bureau of Economic Analysis.

[24] Suh, S., 2001a: MIET 2.0 User's Guide, downloadable at *http://www.leidenuniv.nl/cml/ssp/software/miet*.

[25] Suh, S., 2001b: Generalised calculus of allocation in Life Cycle Assessment - Implications of economic models, CML Working Paper, CML, Leiden University, the Netherlands.

[26] Department of Energy, 1998: Combined State Energy Data System 1997 (CSEDS), DOE/EIA-0376(97).

[27] Department of Energy, 1999: Emission of greenhouse gases in the united states 1998, DOE/EIA-0573(98), Washington DC.

[28] Department of Energy, 2000a: Annual Energy Review 1999, DOE/EIA-0384(99), Washington DC.

[29] Department of Energy, 1997: Manufacturing consumption of energy 1994, DOE/EIA-0512(94), Washington DC.

[30] Department of Energy, 2000b: Greenhouse gas emission database, Database file, Energy Information Administration, Washington DC.

[31] Environmental Protection Agency, 2000: Inventory of US. Greenhouse Gas Emission and Sinks: 1990-1998, EPA 236-R-00-001, Washington DC.

[32] Bureau of Economic Analysis, 1998: Fuel consumption table for 1992, Database file.

[33] Environmental Protection Agency, 2000: Toxic Releases Inventory 98, database CD-ROM.

[34] Environmental Protection Agency, 2000: Envirofact customized query on TRI 98, available at http://www.epa.gov/enviro/.

[35] Environmental Protection Agency, 2000: Air Quality Standard and Planning data, http://www.epa.gov/airs/.

[36] National Center for Food and Agricultural Policy, 1995: Pesticide use in the US crop production, Washington D.C., US.

[37] World Resource Institute, 1998: World resources database diskette - A guide to the global environment, Washington D.C., USA.

[38] Sebald A.V., 1974: An analysis of the sensitivity of large scale input-output models to parametric uncertainties, Center for Advanced Computation, University of Illinois at Urbana-Champaign, Illinois, CAC Document No. 122.

[39] Bullard C.W., Sebald, A.V., 1988: Monte Carlo sensitivity analysis of input-output models, The Review of Economics and Statistics, 70 (4), 708-712

[40] Marheineke, T., R. Friedrich, W. Krewitt, 1998: Application of a hybrid-approach to the life cycle inventory analysis of a freight transport task, Total Life Cycle Conference and Expositition, Austria.

[41] Suh S., Huppes, G., 2000: Gearing input-output model to LCA - Part I: General

framework for hybrid approach, CML Working Paper, CML, Leiden University, Leiden, the Netherlands.

[42] Suh S., 2001c: An hybrid model for environmental systems analysis - Supply and Use framework for Life Cycle Assessment, CML Working paper, CML, Leiden University, the Netherlands.

[43] Suh, S., (ed.) 2001: Proceedings of European Network of Environmental Input-Output Analysis, Madrid, Spain: downloadable at http://www.leidenuniv.nl/cml/ssp/envioa/.

V. An Overall Evaluation of Life Cycle Inventory Approaches*

Abstract

Methods for Life Cycle Inventory (LCI) compilation are reviewed and compared. In total, six methods are distinguished. They are LCI computation using process flow diagram; matrix expression of product system; input-output (IO) based LCI; and three different forms of hybrid analysis: the tiered hybrid analysis, the IO-based hybrid analysis, and the integrated hybrid analysis. Theory and principles of these methods are presented using a numerical example, and evaluated with regard to data requirements, uncertainty of source data, upstream system boundary, technological system boundary, geographical system boundary, available analytical tools, time and labour intensity, simplicity of application, required computational tools and available software tools. Compliance of these methods to ISO standards is discussed. Finally, conclusions are drawn, combined with a view on the future outlook of these inventory building methods.

Keywords: Life Cycle Inventory (LCI), process flow diagram, matrix representation of product system, input-output based LCI, hybrid analysis

* Reprinted from "Suh, S., Huppes, G., *In Press*. Methods in Life Cycle Inventory of a Product, *Journal of Cleaner Production*," under the courtesy of Elsevier Science.

1. Introduction

Life Cycle Inventory analysis (LCI) is defined as a phase of Life Cycle Assessment (LCA) involving the compilation and quantification of inputs and outputs for a given product system throughout its life cycle [1]. The concept of LCI has been adopted for cleaner production as early as the 1960s, and has had broad industrial and academic application in the last decades [2]. Compared to the other phases of LCA, LCI has been considered a rather straightforward procedure except for several issues such as allocation (see e.g. [3]). Reflecting this belief, the method used for LCI compilation has rarely been questioned, although a large number of software, LCI databases and case studies have been released so far. However, contrary to the common belief, different methods have been available for LCI, and they often generate significantly different results. Therefore, it is necessary to assess advantages and limitations of different LCI methods and properly select suitable one(s) for each specific application. It is the aim of this paper to review and compare available methods for LCI compilation, and guide LCA users to properly select the most relevant methods for their analyses in relation to the goal and scope of the study as well as the resources and time available. With adaptations, the results are applicable outside the realm of LCA as well.

This paper is organised as follows: first available methods of LCI compilation are presented. Two computational approaches, process flow diagram and matrix inversion, are assessed, and then methods that utilise economic Input-Output Analysis (IOA) are described with special attention to hybrid analyses. Second, these methods are summarised and compared in terms of data requirements, uncertainty of source data, upstream system boundary, technological system boundary, geographical system boundary, available analytical tools, time and labour intensity, simplicity of application, required computational tools and available software tools. Finally, conclusions are drawn, and compliance of these methods to ISO standards and future outlooks are discussed.

2. Methods for LCI compilation

In parallel with the direct computation using process flow diagram methods, also matrix inversion and IOA have been adopted for LCI compilation a decade ago. In this section theory and principles of matrix representation of product systems, input-output (IO) approaches and combinations of these two are described.

2.1. Process flow diagram

LCI compilation using a process flow diagram appears in early LCA literatures including Fava et al. (1991), Vigon et al. (1993), and Consoli et al. (1993) and has been the most common practice among LCA practitioners [2-4]. Process flow diagrams show how processes of a product system are interconnected through commodity flows. In process flow diagrams, boxes generally represent processes and arrows the commodity flows. Each process is represented as a ratio between a number of inputs and outputs. Using plain algebra, the amount of commodities for fulfilling a certain functional unit is obtained, and by multiplying the amount of environmental interventions generated to produce them, the LCI of the product system is calculated. Fig. 1 illustrates a simple process flow diagram.

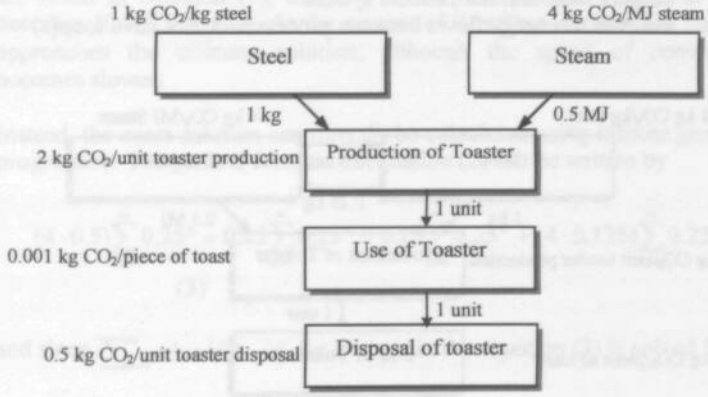

Figure 1. Process flow diagram of a simplified product system.

In the product system shown in Fig. 1 a unit of toaster is produced using 1 kg of steel and 0.5 MJ of steam, and is then used for 1000 times and disposed of. Producing1 kg of steel, 1 MJ of steam and 1 unit of toaster requires 1 kg, 4 kg and 2 kg of CO_2 emission, respectively. Toasting 1 piece of bread and disposal of 1 unit of toaster emits 0.001kg and 0.5kg of CO_2, respectively. Suppose that the toaster under study produces 1000 pieces of toast during its life time, and the functional unit of this product system is given by '1000 piece of toast'. Then one can calculate the amount of commodity requirements and resulting environmental intervention as follows:

$$\left(\frac{1\,\text{kg CO}_2}{\text{kg steel}}\cdot 1\,\text{kg steel}\right)+\left(\frac{4\,\text{kg CO}_2}{\text{MJ steam}}\cdot 0.5\,\text{MJ steam}\right)+\left(\frac{2\,\text{kg CO}_2}{\text{unit toaster prod.}}\cdot 1\,\text{unit toaster prod.}\right)$$

$$+\left(\frac{0.001\,\text{kg CO}_2}{\text{piece of bread toasted}}\cdot 1000\,\text{pieces of bread}\right)+\left(\frac{0.5\,\text{kg CO}_2}{\text{unit toaster disposed}}\cdot 1\,\text{unit toaster}\right) \quad (1)$$

$$=6.5\,\text{kg CO}_2$$

Computing LCI directly from a process flow diagram is not as easy as presented by equation (1) if following conditions are not met:

a. each production process produces only one material or energy
b. each waste treatment process receives only one type of waste
c. the product system under study delivers inputs to, or receives outputs from another product system
d. material or energy flows between processes do not have loop(s)

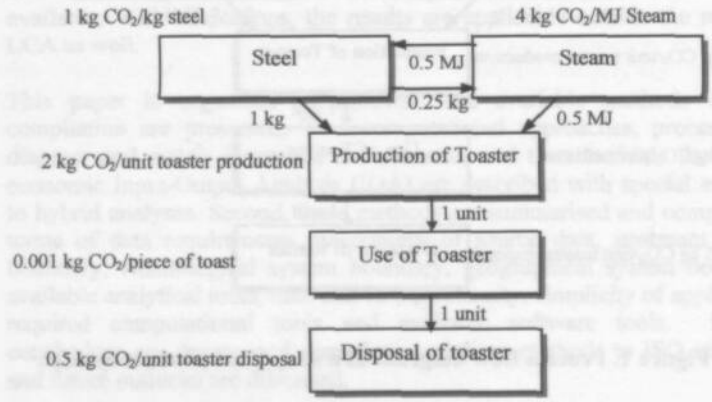

Figure. 2. Process flow diagram with an internal commodity flow loop.

Conditions from 'a' to 'c' are related to the multifunctionality problem. A detailed treatment of allocation as the solution to this problem is out of the scope of this paper but can be found elsewhere [5-9]. Condition 'd' requires that all processes in the product system under study do not utilise their own output indirectly. For example, suppose that production of 1 kg steel requires 0.5 MJ of steam and production of 1 MJ of steam also needs 0.5 kg of steel. This implies that the production of steel indirectly requires its own process

output, steel through steam production process, and *vice versa*. A process diagram of this product system can be drawn as in Fig. 2.

Consoli et al. (1993) explicitly mentioned this problem and suggested to use an iterative method to find the solution [4]. The example above is solved using the iterative method as follows

$$\left(\frac{4\,\text{kg CO}_2}{\text{MJ steam}}\cdot 0.5\,\text{MJ steam}\right)+\left(\frac{1\,\text{kg CO}_2}{\text{kg steel}}\cdot 0.25\,\text{kg steel}\right)+\left(\frac{4\,\text{kg CO}_2}{\text{MJ steam}}\cdot 0.125\,\text{MJ steam}\right)+\cdots$$
$$\left(\frac{1\,\text{kg CO}_2}{\text{kg steel}}\cdot 0.25\,\text{kg steel}\right)+\left(\frac{4\,\text{kg CO}_2}{\text{MJ steam}}\cdot 0.125\,\text{MJ steam}\right)+\left(\frac{1\,\text{kg CO}_2}{\text{kg steel}}\cdot 0.0625\,\text{kg steel}\right)+\cdots \quad (2)$$

Up to the third iteration equation (2) makes up 3.5625 kg CO_2. If added to the result in equation (1), the LCI of the new product system in Fig. 2 becomes 10.0625 kg CO_2. As the number of iterations is increased, the result approaches the ultimate solution, although the speed of convergence becomes slower.

Instead, the exact solution can directly be calculated using infinite geometric progression. The general formula of equation (2) can be written by

$$(4\cdot 0.5)\sum_{n=0}^{\infty}0.25^n+0.25\sum_{n=0}^{\infty}0.25^n+0.25\sum_{n=0}^{\infty}0.25^n+(4\cdot 0.125)\sum_{n=0}^{\infty}0.25^n \quad (3)$$

and since $\sum_{n=0}^{\infty}a^n=1/(1-a)$ for $0<a<1$, the equation (3) is solved by

$$=4\cdot\frac{0.5}{1-0.25}+2\cdot\frac{0.25}{1-0.25}+4\cdot\frac{0.125}{1-0.25} \quad (4)$$
$$=4.$$

Thus the total inventory of the product system shown in fig. 2 becomes 6.5 + 4 = 10.5 kg CO_2.

2.2. Matrix representation of product system

Although often overlooked, there are more computational approaches in LCI compilation using process analysis. The matrix inversion method was first introduced to LCI computation by Heijungs (1994) [10]. Basically Heijungs (1994) utilises a system of linear equations to solve an inventory problem.

We define $n \times n$ LCA technology matrix $\widetilde{\mathbf{A}} = \|a_{ij}\|$ such that an element, a_{ij} shows inflows or outflows of commodity i of process j for a certain duration of process operation, and especially inflows and outflows are noted by positive and negative values, respectively (for discussions on rectangularity see Heijungs and Suh (2002) [11]). We assume that processes at stake are being operated under a steady-state condition, so that selection of a specific temporal window for each process does not alter the relative ratio between elements in a column. Each entry of a column vector $\widetilde{\mathbf{x}}$ shows the required process operation time of each process to produce the required net output of the system.[1] Then commodity net output of the system $\widetilde{\mathbf{y}}$ is given by

$$\widetilde{\mathbf{A}}\widetilde{\mathbf{x}} = \widetilde{\mathbf{y}}, \qquad (5)$$

which shows that the amount of a commodity delivered to outside of the system is equal to the amount produced minus the amount used within the system. Rearranging (5), the total operation time $\widetilde{\mathbf{x}}$ required to meet the total commodity net output $\widetilde{\mathbf{y}}$ is calculated by

$$\widetilde{\mathbf{x}} = \widetilde{\mathbf{A}}^{-1}\widetilde{\mathbf{y}}. \qquad (6)$$

Let us further define a $p \times n$ matrix $\widetilde{\mathbf{B}} = \|b_{ij}\|$ of which an element b_{ij} shows the amount of pollutants or natural resources i emitted or consumed by process j during the operation time that $a_{\cdot j}$ is specified. Suppose that $\widetilde{\mathbf{A}}$ is not singular, then the total direct and indirect pollutant emissions and natural resources consumption by the system to deliver a certain amount of commodity output to the outside of the system is calculated by

$$\widetilde{\mathbf{M}} = \widetilde{\mathbf{B}}\widetilde{\mathbf{A}}^{-1}\widetilde{\mathbf{k}}, \qquad (7)$$

where $\widetilde{\mathbf{M}}$ is the total direct and indirect environmental intervention matrix, and $\widetilde{\mathbf{k}}$ is an arbitrary vector that shows the functional unit of the system.

The commodity flows of the product system shown in Fig. 1 can be expressed by the LCA technology matrix as well:

[1] The term 'operation time' is used here for convenience, while various synonyms including 'occurrence' (Heijungs, 1994), 'scaling factor' (Heijungs and Frischknecht, 1998) can be found in LCA literatures [10, 12]. In this work we followed Heijungs (1997) [13].

$$\tilde{\mathbf{A}} = \begin{bmatrix} 1 & 0 & -1 & 0 & 0 \\ 0 & 1 & -0.5 & 0 & 0 \\ 0 & 0 & 1 & -1 & 0 \\ 0 & 0 & 0 & 1000 & 0 \\ 0 & 0 & 0 & 1 & -1 \end{bmatrix} \tag{8}$$

The columns indicate steel production, steam production, toaster production, use of toaster and disposal of toaster from left to right, while each row is assigned to steel (kg), steam (MJ), toaster (unit), toast (piece) and disposed toaster (unit).

The environmental intervention matrix, and the commodity net output of the system are given by

$$\tilde{\mathbf{B}} = \begin{bmatrix} 1 & 4 & 2 & 1 & 0.5 \end{bmatrix} \tag{9}$$

and

$$\tilde{\mathbf{k}} = \begin{bmatrix} 0 \\ 0 \\ 0 \\ 1000 \\ 0 \end{bmatrix}, \tag{10}$$

respectively.

The inventory result of this product system is now calculated using (7) as

$$\tilde{\mathbf{M}} = \tilde{\mathbf{B}}\tilde{\mathbf{A}}^{-1}\tilde{\mathbf{k}} = 6.5, \tag{11}$$

which is identical to the result shown in equation (1). The matrix inversion method shows its strength as the relationships between processes become more complex. For example, Equation (7) directly calculates the exact solution for the system shown in Fig. 2 without using the iterative method or infinite progression. The LCA technology matrix in equation (8) can be modified to represent the product system in Fig. 2 as

$$\widetilde{\mathbf{A}}' = \begin{bmatrix} 1 & -0.5 & -1 & 0 & 0 \\ -0.5 & 1 & -0.5 & 0 & 0 \\ 0 & 0 & 1 & -1 & 0 \\ 0 & 0 & 0 & 1000 & 0 \\ 0 & 0 & 0 & 1 & -1 \end{bmatrix}, \quad (12)$$

and the formula (7) provides the inventory of the system by

$$\widetilde{\mathbf{M}}' = \widetilde{\mathbf{B}}\widetilde{\mathbf{A}}'^{-1}\widetilde{\mathbf{k}} = 10.5, \quad (13)$$

which confirms the previous solution derived by the infinite geometric progression.

Additionally, representing product systems in a matrix provides various analytical tools as well. For instance, Heijungs and Suh (2002) provide a comprehensive treatment on matrix utilisation and its analytical extensions for LCA practitioners [11], and Suh and Huppes (2002a) introduces a supply and use framework and economic models developed by IO economists, including [14-18], to deal with the allocation problem by using this matrix expression [19].

2.3. IO-based LCI

The result of the methods described in the section 2.1. and 2.2. are referred to as LCIs based on process analysis. In principle, all processes in an economy are directly or indirectly connected with each other. In that sense, process analysis based LCI is always truncated to a certain degree, since it is practically not viable to collect process-specific data for the whole economy, and this problem has led the use of IOA in LCA.

In the original work by W. Leontief the input-output table describes how industries are inter-related though producing and consuming intermediate industry outputs that are represented by monetary transaction flows between industries [20]. The input-output model assumes that each industry consumes outputs of various other industries in fixed ratios in order to produce its own unique and distinct output. Under this assumption, an $m \times m$ matrix $\mathbf{A}$ is defined such that each column of $\mathbf{A}$ shows domestic intermediate industry outputs in monetary values required to produce one unit of monetary output of anothers. Let $\mathbf{x}$ denote the total industry output, then $\mathbf{x}$ is equal to the summation of the industry output consumed by intermediate industries, by households as final consumers, and by exports which is left out for convenience here. I.e.,

$$\mathbf{x} = \mathbf{A}\mathbf{x} + \mathbf{y}, \qquad (14)$$

where **y** denotes total household purchase of industry outputs. Then, the total domestic industry output **x** required to supply the total household purchases of domestic industry outputs is calculated by

$$\mathbf{x} = (\mathbf{I} - \mathbf{A})^{-1}\mathbf{y}, \qquad (15)$$

where **I** denotes the $m \times m$ identity matrix. The model by Leontief has been further improved notably by R. Stone by distinguishing commodities from industry outputs [15, 21]. Although very rarely utilised for IO-based LCI, the supply and use framework, which has later been incorporated in the System of National Accounts (SNA) by the UN, has a particular importance for LCA applications of IOA, since LCA is an analytical tool based on the functionality of goods and services, and a supply and use framework makes it possible to distinguish different functions from an industry output (see Suh (2001) [22]).

Environmental extensions of IOA can easily be made by assuming that the amount of environmental intervention generated by an industry is proportional to the amount of output of the industry and the identity of the environmental interventions and the ratio between them are fixed. Let us define a $q \times m$ matrix $\mathbf{B}$, which shows the amount of pollutants or natural resources emitted or consumed to produce unit monetary output of each industry. Then the total direct and indirect pollutant emissions and natural resources consumption by domestic industries to deliver a certain amount of industry output is calculated by

$$\mathbf{M} = \mathbf{B}(\mathbf{I} - \mathbf{A})^{-1}\mathbf{k}, \qquad (16)$$

where **M** is the total domestic direct and indirect environmental intervention matrix, and **k** is an arbitrary vector that shows net industry output of the system, which will be supplied to the outside of the system. IO-based LCI uses basically the formula (16).

Applications of IOA to LCA started from early 90s. Moriguchi et al. (1993) utilised the completeness of the upstream system boundary definition of Japanese IO tables for LCA of an automobile [23]. Later, this line of approach has been further enriched using more comprehensive environmental data in the US notably by Carnegie Mellon University [24]. Since all transaction activities within a country are, in principle, recorded in the national IO table, it is often argued that the system boundary of an IO-based LCI is generally more complete than that of process analysis (see e.g.

Hendrickson at al. (1998), Lave et al. (1995) , Lenzen (2001) [24-26]). However, this argument requires some conditions to be fulfilled. First, it should be clearly noted that the IOA itself can provide LCIs only for pre-consumer stages of the product life cycle, while the rest of the product life cycle stages are outside the system boundary of IOA. Second, the amount of imported commodities by the product system under study should be negligible. Otherwise errors due to truncation or misspecification of imports may well be more significant than that due to cut-off in process based LCI.[2] Third, data age of IO-based LCI is normally older than process-based one, since it takes one to five years to publish IO tables based on industry survey.

Another limitation of IO-based LCI is due to the aggregation of industries and commodities. Generally, IO tables distinguish not more than several hundred commodities, so that a number of heterogeneous commodities are included within a commodity category, diluting differences between them. Suh and Huppes (2001) empirically showed in a case study that due to this aggregation problem, the result of IO-based LCI can be much less than that of process based one, and the converse may be true as well [29].

Nonetheless, the biggest practical obstacle in applying IO techniques to LCI is the lack of applicable sectoral environmental data in most countries. Although there are some fragmental emission inventory databases available, differences in the level of detail, base year and industry classification make it difficult to construct well-balanced sectoral environmental data in most countries.

So, IO-based LCI method can provide information on the environmental aspects of a commodity on the basis of a reasonably complete system boundary using less resources and time. For a commodity of which the product system heavily relies on imports and newly developed technologies, however, applicability of IO-based LCI methods is rather limited.

2.4. Hybrid analysis

IO-based inventory is relatively fast, and upstream system boundary is more complete within the national level, while process-based LCI provides more accurate and detailed process information with a relatively more recent data. Linking process-based and IO-based analysis, combining the strengths of both, are generally called *hybrid method* [27-31]. So far hybrid analysis has

[2] By endogenising imports in the use matrix, it is assumed that imported goods are produced under the same input-output structure of the domestic economy, which can significantly reduce the truncation error. However, the assumption of identical input-output structure of imported goods may still induce errors.

been adopted to LCI compilation in different ways, that will be distinguished here as tiered hybrid analysis; IO-based hybrid analysis; and integrated hybrid analysis.

Tiered hybrid analysis

The concept of tiered hybrid analysis appears from the1970s [33-34]. Bullard and Pillati (1976) and Bullard et al. (1978) combined process analysis similar to the method described in section 2.1. of this paper, with IOA to calculate net energy requirements of the US economy.

Tiered hybrid analysis utilises process-based analysis for the use and disposal phase as well as for several important upstream processes, and then the remaining input requirements are imported from an IO-based LCI. Tiered hybrid analysis can be performed simply by adding IO-based LCIs to the process-based LCI result. Moriguchi et al. (1993) introduced the tiered hybrid approach in LCA, and Marheineke et al. (1998) also used the tiered hybrid approach in a case study of a freight transport activity [23, 29]. Model II by Joshi (2000) describes this approach as well [30]. The Missing Inventory Estimation Tool (MIET) by Suh (2001) and Suh and Huppes (2002b) is a database to support tiered hybrid analysis using 1996 US IO table and environmental statistics [22, 31]. Entering the amount of commodity used by the product system either in producers' price or purchasers' price, MIET returns inventory results as well as characterised results of the commodity.

Tiered hybrid analysis provides reasonably complete and relatively fast inventory results. However, the border between process-based system and IO-based system should be carefully selected, since significant error can be introduced if important processes are modelled using the aggregated IO information. Secondly, there are some double-counting problems in tiered hybrid analysis. In principle, the commodity flows of the process based system are already included in the IO table, so that those portions should be subtracted from the IO part. Thirdly, the tiered hybrid model deals with the process-based system and the IO-based system separately, so that the interaction between them can not be assessed in systematic way. For example the effects of different options at the end of the product life cycle, which can change the industry-interdependence by supplying materials or energy to the IO-based system, can not be properly modelled using the tiered hybrid method.

IO-based hybrid analysis

Treloar (1997) employed the IO-based hybrid approach for the analysis of energy requirements in Australia [28]. Joshi (2000) also used the same line of approach for LCA of fuel tanks [30]. Generally, the IO-based hybrid

approach is carried out by disaggregating industry sectors in the IO table, while the tiered hybrid method is applied for the use and end-of-life stages of the product life cycle [30]. Suppose that industry j and its primary product i in an IO table is to be disaggregated into two (eg. j_a, j_b, i_a and i_b). Then the augmented IO table can be constructed as

$$\mathbf{A}' = \begin{bmatrix} a_{11} & \cdots & a_{1j_a} & a_{1j_b} & \cdots & a_{1n} \\ \vdots & & \vdots & \vdots & & \vdots \\ a_{i_a1} & \cdots & a_{i_aj_a} & a_{i_aj_b} & \cdots & a_{i_an} \\ a_{i_b1} & \cdots & a_{i_bj_a} & a_{i_bj_b} & \cdots & a_{i_bn} \\ \vdots & & \vdots & \vdots & & \vdots \\ a_{n1} & \cdots & a_{nj_a} & a_{nj_b} & \cdots & a_{nn} \end{bmatrix}. \qquad (17)$$

Columns $a_{.j_a}$ and $a_{.j_b}$ should be estimated using information on upstream requirements of the process, and rows $a_{i_a.}$ and $a_{i_b.}$ should be estimated using sales information. The environmental intervention matrix should be disaggregated as well using detailed emission data of the disaggregated process. This procedure can be performed in an iterative way, so that the augmented IO table becomes accurate enough to perform a comprehensive analysis. The LCI up to the pre-consumer stage, using IO-based hybrid analysis, is calculated by

$$\mathbf{M}' = \mathbf{B}'(\mathbf{I} - \mathbf{A}')^{-1}\mathbf{k}'. \qquad (18)$$

Inventory results for the remaining stages of the product life cycle, including use and disposal, should be added manually as described in section 2.4.1. Since this approach partly utilises the tiered hybrid method, the interactive relationship between pre-consumer stages and the rest of the product life cycle is difficult to model.

The disaggregation procedure is the most essential part of IO-based hybrid approach. Joshi (2000) suggested to use existing LCIs for information sources of detailed input requirements, sales structure and environmental intervention.

Integrated hybrid analysis

Suh and Huppes (2000) suggested using hybrid analysis from the perspective of both LCA and IOA [35]. These authors generally assume that information from IO accounts are less reliable than process specific data due to temporal differences between IO data and current process operation, aggregation, import assumptions etc. Therefore, the IO table is interconnected with the matrix representation of the physical product system as described in section

2.2. only at upstream and downstream cut-offs where better data are not available. Since information on the process-based system is gathered by direct inspections and questionnaires, purchase and sales records for cut-offs required to link the process-based system with the IO table may be relatively easy to obtain. The general formula of this hybrid model is

$$\mathbf{M}_{IH} = \mathbf{B}_{IH}\mathbf{A}_{IH}^{-1}\mathbf{k}_{IH} = \begin{bmatrix} \tilde{\mathbf{B}} & \mathbf{0} \\ \mathbf{0} & \mathbf{B} \end{bmatrix} \begin{bmatrix} \tilde{\mathbf{A}} & \mathbf{Y} \\ \mathbf{X} & \mathbf{I}-\mathbf{A} \end{bmatrix}^{-1} \begin{bmatrix} \tilde{\mathbf{k}} \\ \mathbf{0} \end{bmatrix}. \qquad (19)$$

Matrix **X** represents upstream cut-off flows to the LCA system, linked with relevant industry sector in IO table, and **Y** does downstream cut-off flows to the IO system from the LCA system. Each element of **X** has a unit of monetary value/operation time while that of **Y** has a unit of physical unit/monetary value. This model has been applied to several recent LCI studies including Suh and Huppes (2001), Vogstad et al. (2001) and Strømman (2001) [31, 36-37].

Since all stages of the product life cycle, including use and disposal phases, can be expressed by the LCA technology matrix, $\tilde{\mathbf{A}}$, this approach does not need to apply a tiered hybrid method to complete an LCI, and thus full interactions between individual processes and industries can be modelled in a consistent framework.

3. Comparison between methods

Methods so far described are compared with criteria of data requirements, uncertainty of source data, upstream system boundary, technological system boundary, geographical system boundary, available analytical tools, time and labour intensity, simplicity of application, required computational tools and available software tools. (Table 1). As shown in Table 1, it is not that one specific method is superior to all others, but decisions can be made to select the most relevant tool based on goal and scope, and available resources and time.

Since both process analysis methods require process-specific information, data requirements as well as time and labour intensity are considered to be higher than for other methods. Compared to process-based analyses, methods that utilise IOA generally show smaller data requirements, that is assuming that IO-based LCIs are already available. Integrated hybrid analysis is an exception, since it relies on full process analysis, and then utilises IO-based LCI only for cut-offs. For both tiered hybrid and IO-based hybrid analysis, there are several criteria for which judgement can be case specific, since the boundary between detailed process-based analysis and IO-based analysis

may vary. For example, time and labour intensity will rise, and source data uncertainty will be lowered as the process-based part becomes larger for these methods.

In terms of system boundary, three criteria are distinguished. Regarding the upstream system boundary, methods that utilise IOA show higher completeness, while process-based analyses are generally superior for other system boundaries. There are numerous analytical tools that have been developed in IOA field. Most of them can be applied for part of IO-based hybrid analysis, although use and disposal phases should be treated separately.

In terms of the simplicity of computation both IO-based and integrated hybrid analysis are considered to be more complicated than other methods, since these two approaches require some understanding on IOA. There are several computational tools and databases mentioned in Table 1. Chain Management by Life Cycle Assessment (CMLCA) is a software tool originally developed for education purposes although it can be successfully utilised for real case studies [38]. Economic Input-Output Life Cycle Assessment (EIOLCA) is a web-based IO-based inventory calculator that provides the amount of water usage, conventional pollutants emission, global warming gas releases and toxic pollutants emissions per sector output in monetary unit [39]. Currently 1997 US environmental IO data is available from their web site. Abundant analytical tools from both matrix representation of product system as well as IOA can be applied to integrated hybrid analysis. MIET has recently been updated using the detailed 1998 IO table and corresponding environmental statistics, and now version 3.0 is available.

Finally, the mechanisms of the three hybrid techniques in linking the process-based system part with the IO-based system part are compared. The computational structure of tiered hybrid, IO-based hybrid and integrated hybrid approach can be noted by matrix expressions shown in equations (20), (21) and (19), respectively, with equation (19) here repeated for easier comparison.

$$\mathbf{M}_{\mathrm{TH}} = \tilde{\mathbf{B}}\tilde{\mathbf{A}}^{-1}\tilde{\mathbf{k}} + \mathbf{B}(\mathbf{I}-\mathbf{A})^{-1}\mathbf{k} \qquad (20)$$

$$\mathbf{M}_{\mathrm{IOH}} = \tilde{\mathbf{B}}\tilde{\mathbf{A}}^{-1}\tilde{\mathbf{k}} + \mathbf{B}(\mathbf{I}-\mathbf{A}')^{-1}\mathbf{k}' \qquad (21)$$

$$\mathbf{M}_{\mathrm{IH}} = \left[\begin{array}{c:c} \tilde{\mathbf{B}} & \mathbf{0} \\ \hdashline \mathbf{0} & \mathbf{B} \end{array}\right] \left[\begin{array}{c:c} \tilde{\mathbf{A}} & \mathbf{Y} \\ \hdashline \mathbf{X} & \mathbf{I}-\mathbf{A} \end{array}\right]^{-1} \left[\begin{array}{c} \tilde{\mathbf{k}} \\ \hdashline \mathbf{0} \end{array}\right]. \qquad (19)$$

Table 1. Comparison between methods for LCI compilation.

	LCI based on process analysis		Input-output based LCI	Hybrid LCI		
	Process flow diagram	Matrix representation		Tiered hybrid analysis	IO-based hybrid analysis	Integrated hybrid analysis
Data requirements	commodity and environmental flows per process	commodity and environmental flows per process	commodity and environmental flows per sector	commodity and environmental flows per sector and process	commodity and environmental. flows per sector and process-based LCIs	commodity and environmental. Flows per sector and process
Uncertainty of source data	low	low	medium to high	depends*	depends*	low
Upstream system boundary	medium to poor	medium to poor	complete	complete	complete	complete
Technological system boundary	complete	complete	medium to poor	depends*	depends*	complete
Geographical system boundary	not limited	not limited	domestic activities only	depends*	domestic activities only	not limited

* dependant upon the shares of process analysis and IO-based system

Table 1. (Continued) Comparison between methods for LCI compilation.

	LCI based on process analysis		Input-output based LCI	Hybrid LCI		
	Process flow diagram	Matrix representation		Tiered hybrid analysis	IO-based hybrid analysis	Integrated hybrid analysis
Applicable analytical tools	rare	abundant, eg. in Heijungs and Suh (2002) [11]	rare	rare	abundant (analytical tools for IOA for disaggregated IO part)	abundant (both analytical tools for IOA and LCA for entire system)
Time- and labour intensity	high	high	low, if environm. data available	depends*	depends*	high
Simplicity of application	simple	simple	simple	simple	complex	complex
Required computational tools	Excel or similar (no matrix inversion)	matrix inversion (eg. MatLab, Mathematica.)	Excel or similar	Excel or similar	matrix inversion (eg. MatLab, Mathematica.)	matrix inversion (eg. MatLab, Mathematica)
Available software tools	most available LCA software tools	CMLCA	MIET, EIOLCA	MIET + LCA software tool	-	CMLCA

* dependant upon the shares of process analysis and IO-based system

By arranging (20) and (21) for better comparison they can be noted as

$$\mathbf{M}_{\mathrm{TH}} = \left[\begin{array}{c:c} \widetilde{\mathbf{B}} & \mathbf{0} \\ \hdashline \mathbf{0} & \mathbf{B} \end{array}\right] \left[\begin{array}{c:c} \widetilde{\mathbf{A}} & \mathbf{0} \\ \hdashline \mathbf{0} & \mathbf{I}-\mathbf{A} \end{array}\right]^{-1} \left[\begin{array}{c} \widetilde{\mathbf{k}} \\ \hdashline \mathbf{k} \end{array}\right] \tag{20'}$$

$$\mathbf{M}_{\mathrm{IOH}} = \left[\begin{array}{c:c} \widetilde{\mathbf{B}} & \mathbf{0} \\ \hdashline \mathbf{0} & \mathbf{B}' \end{array}\right] \left[\begin{array}{c:c} \widetilde{\mathbf{A}} & \mathbf{0} \\ \hdashline \mathbf{0} & \mathbf{I}-\mathbf{A}' \end{array}\right]^{-1} \left[\begin{array}{c} \widetilde{\mathbf{k}} \\ \hdashline \mathbf{k}' \end{array}\right] \tag{21'}$$

Equations (20′), (21′) and (19) show the solution model of tiered hybrid analysis, IO-based hybrid analysis and integrated hybrid analysis, respectively. $\widetilde{\mathbf{B}}$, $\widetilde{\mathbf{A}}$ and $\widetilde{\mathbf{k}}$ represent the environmental matrix, technology matrix and arbitrary final demand vector of the process-based part, respectively, while $\mathbf{B}$, $\mathbf{A}$ and $\mathbf{k}$ those of the IO part. Prime (′) indicates an augmented (disaggregated) matrix or vector. Especially, $\widetilde{\mathbf{B}}$ and $\widetilde{\mathbf{A}}$ for IO-based hybrid analysis (eq. 21) contain environmental interventions and commodity flows for the use and disposal phase of the product life cycle.

It is not difficult to see, by substituting $\mathbf{X}$ and $\mathbf{Y}$ in (19) with $\mathbf{0}$, that the tiered and IO-based hybrid approaches in (20′) and (21′) are special cases of the more general formulation of hybrid approach in (19). Note here that $\mathbf{k}$ and $\mathbf{k}'$ in (20′) and (21′) are equivalent with $\mathbf{X}$ in (19) (see Heijungs and Suh (2002) [11]). Two differences are that first, the tiered hybrid and IO-based hybrid analyses contains $\mathbf{0}$ matrices in the hybrid technology matrix, while the integrated hybrid analysis shows $\mathbf{X}$ and $\mathbf{Y}$ instead of $\mathbf{0}$s. This difference clearly points out that there are no formal linkages between process-based system and IO-based system within the models of tiered and IO-based hybrid analysis. Instead, the linkages are given outside of the model by the final demand vector, which is the second visible difference. The final demand vector which is exogenously given for the net external demand contains $\mathbf{0}$ for integrated hybrid analysis, while others have $\mathbf{k}$ or $\mathbf{k}'$ instead of $\mathbf{0}$. The vectors $\mathbf{k}$ and $\mathbf{k}'$ in Equation (20′) and (21′) show the amount of the commodities in the IO system that is used by the process-based system. In contrast, $\mathbf{X}$ and $\mathbf{Y}$ of integrated hybrid analysis show the commodity flows both from the IO system to the process-based system and from process-based system to the input output system, in equation (19). In case the flows outgoing from the process-based system to the IO-based system are negligible, Equation (19) may generate a similar result with that from Equation (20), although often it is not the case, as large scale processes, such as steel or electricity generation processes, that are dealt with in the process-based system may supply only small portion of their outputs to the

process-based system under study. These differences are graphically illustrated in fig. 3.

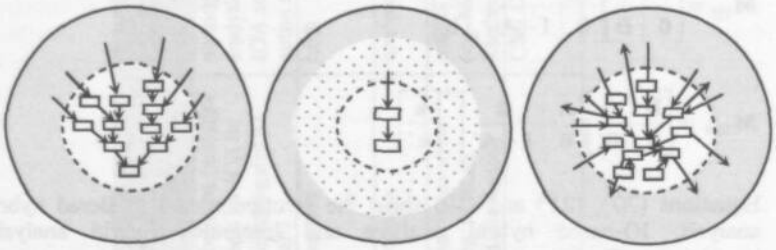

a) Tiered hybrid analysis *b) Input-output based hybrid analysis* *c) Integrated hybrid analysis*

Figure 3. Interactions between process-based system and IO-based system of hybrid analyses.

The bold outer line shows the overall system boundary and the dotted line shows the boundary between the process-based system part and the IO system part. The shaded area indicates the IO system and the white one the process-based system. The dotted area in b) indicates the disaggregated IO system, while the full white refers to use and post-use processes only. In the tiered hybrid analysis, commodities going into the process-based system are modelled using the IO-based system. Notice that only one direction of arrows, from the IO-based system to process-based system, is possible in tiered hybrid analysis. In the IO-based hybrid analysis, only two process types, for use and disposal, are described by the process-based system, in white, while many commodity flows are described in the disaggregated IO part, the dotted area. In the integrated hybrid analysis, the major part of commodity flows are represented by the process-based system, and cut-offs are linked with the IO-based system. Notice that here arrows can go both directions, from the IO-based system to the process-based system (upstream cut-offs/links) and from the process-based system to the IO-based system (downstream cut-offs/links) forming a network structure rather than a tree.

4. ISO compliance

The issue related to compliance with ISO standards is briefly discussed. ISO 14040 and ISO 14041 generally define the framework without specifying which computation technique is to be used [1, 39]. Therefore, both LCI computation methods using process flow diagram and matrix representation are considered to be compatible with ISO standards. Methods that utilise IOA can be considered differently. According to ISO, LCA is compilation

and evaluation of the inputs, outputs and the potential environmental impacts of a product system *throughout its life cycle*[3] [1]. Thus, what is so-called cradle-to-gate analysis, which is the case for IO-based LCI is not an LCA study in strict sense of ISO standards, since it does not contain the use and disposal phase within its scope. This implies that IO-based inventory alone is not considered as ISO compatible LCI in general sense. However, if combined with inventory result from other stages of life cycle, as is the case for hybrid methods, the scope of the analysis is fully in line with the ISO standard. Then the ISO compliance of introducing external model such as IO accounts can be questioned for hybrid methods. ISO 14041, clause 4.5. "Modelling product systems" mentioned about the practical difficulties of describing all the relationships between all the unit processes in a product system and opens up possibilities of using models to describe key elements of physical system [40]. Hence, in principle, there are no restrictions in using IO accounts to describe upstream process relationships if the model and assumptions are clearly noted.

A second issue where non-compliance might occur is in allocation [40]. However, in ISO 14041, a range of options is given, with a requirement on transparency and on application of several methods if more of them apply. Such refinements are not yet discussed in this paper. However, the options of allocation by substitution or by partitioning both can be developed in pure IOA and in hybrid analysis as well, which suggests possible compliance to ISO standards (see Suh and Huppes (2002a) [19]). For more detailed discussion on the issue of ISO compliance and system boundary problem, see Suh et al. (2002) [41].

5. Conclusions and Discussion

Having made the survey, which methods for inventory construction can be recommended for LCA users? Although this very much depends on the specific features of the case at hand, especially considering goal and scope and available resources and time, some main guidelines can be given.

Matrix representation of product systems clearly is superior to the flow diagram method for all but the most simplified systems. Pure IO-based LCI can at best be used as a first proxy. So the next question is, how hybrid LCI compares to process-based analysis.

When comparing this pure process-based LCI with the integrated hybrid analysis, the latter has a clear advantage in terms of the quality of the result, especially in terms of system completeness. With information on the

[3] Italics by current authors.

monetary value only for cut-off flows and with improved availability of environmentally extended IO data, preferably regionalised, the additional data requirements and the added complexity both may become quite limited. This seems a best choice for the future, if not for now already. However, it adds to the cost of already expensive and time-consuming full process LCA.

What may be the role of the other two types of hybrid analysis? The tiered hybrid analysis has the appeal of easy extension on existing simple partial LCA systems in filling in the gaps. However, the connection between the two inventory subsystems is made externally, 'by hand'. The only partial links between the systems remain a source of error which is difficult to assess. The IO-based hybrid analysis is conceptually more mature. Although use and post-use processes are not incorporated in the IO part, and the links between the systems remains external, the IO-based hybrid analysis shows higher resolution for the IO-based system and does not have problems of overlap: the processes based system does not contain commodity flows represented in the IO table.

With time and money available, the choice clearly is for the integrated hybrid analysis. However, what if time and money are scarce? Then a different choice can be made. A rational strategy at a case level could be to consider a step-wise approach, where tiered hybrid approach is performed first by specifying upstream cut-offs ($\mathbf{k}$ or $\mathbf{X}$). With additional resources and time available, then the next step will be specifying downstream cut-offs ($\mathbf{Y}$) and further disaggregating IO table ($\mathbf{A}'$). The step-wise approach can start with few important processes worked out in detail, that is quite cheap and fast. Then, focussed on where main contributions and uncertainties are, a stepwise build-up of resolution can follow, until a sufficient quality of result has been developed. In this development, there always is a full and consistent system definition, with resolution being added as required.

Prerequisites for this highly important development are in the field of databases and software. LCA databases are to be adapted to the integrated hybrid method by supplying monetary data on process flows. IO data bases, still available mainly at the single country level, should develop into a regionalised, trade-linked global system. High-quality IO database can be set up on the basis of supply and use tables, with detailed commodity flows available in most primary data sources where the supply and use tables are constructed from. Also, the environmental data in the IO part, present now for a few countries only in greater detail, can become available for many more countries. Since most commercially available LCA software is not able to handle matrix inversion for LCI computation, a software tool development that enables hybrid analysis by broader LCA users is also required.

References

[1] ISO 14040 Environmental management - Life cycle assessment - Principles and framework: International Organisation for Standardisation, Geneva, Switzerland, 1998.

[2] Vigon BW, Tolle DA, Cornaby BW, Latham HC, Harrison CL, Boguski TL, Hunt RG, Sellers JD. Life Cycle Assessment: Inventory Guidelines and Principles, EPA/600/R-92/245: Environmental Protection Agency (EPA), USA, 1993.

[3] Fava JA, Denison R, Jones B, Curran MA, Vigon B, Selke S, Barnum J. A Technical Framework for Life-Cycle Assessment: SETAC, Washington, USA, 1991.

[4] Consoli F, Allen D, Boustead I, Fava J, Franklin W, Jensen AA, de Oude N, Parirish R, Perriman R, Postlethwaite D, Quay B, Séguin J, Vigon B. Guidelines for Life-Cycle Assessment: A 'Code of Practice': SETAC, 1993.

[5] Lindfors L-G, Christiansen K, Hoffman L, Virtanen Y, Juntilla V, Hanssen O-J, Rønning A, Ekvall T, Finnveden G. Nordic Guidelines on Life-Cycle Assessment, Nord 1995:20: Nordic council of Ministers, Copenhagen, 1995.

[6] Ekvall, T. System expansion and allocation in Life Cycle Assessment, with implications for wastepaper management. Ph.D. dissertation: Chalmers University of Technology, Göthenburg, Sweden, 1999.

[7] Huppes G, Schneider F. Proceedings of the European workshop on allocation in LCA: CML, Leiden, the Netherlands, 1994.

[8] ISO/TR14049 Environmental management - Life cycle assessment - Examples of application of ISO 14041 to goal and scope definition and inventory analysis: International Organisation for Standardisation, Geneva, Switzerland, 2000.

[9] Guinée JB, Gorree M, Heijungs R, Huppes G, Kleijn R, van Oers L, Wegener Sleeswijk A, Suh S, Udo de Haes HA, de Bruijn JA, van Duin R, Huijbregts MAJ. Handbook on life cycle assessment. Operational guide to the ISO standards: Kluwer Academic Publisher, Dordrecht, the Netherlands, 2002.

[10] Heijungs R. A generic method for the identification of options for cleaner products. Ecological Economics 1994;10:69-81.

[11] Heijungs R, Suh S, The Computational Structure of Life Cycle Assessment: Kluwer Academic Publisher, Dordrecht, the Netherlands, 2002.

[12] Heijungs R, Frischknecht R. A Special View on the Nature of the Allocation Problem. Int J LCA 1998;3(5):321-332.

[13] Heijungs R. Economic Drama and the Environmental Stage - Formal derivation of algorithmic tools for environmental analysis and decision-support from a unified epistemological principle: Ph.D. dissertation, Leiden University, Leiden, the Netherlands, 1997.

[14] Stone R, Bacharach M, Bates J. Input-Output Relationships, 1951-1966, Programme for Growth: Volume 3, Chapman and Hall, London, UK, 1963.

[15] ten Raa T, Chakraborty D, Small JA. An alternative treatment of secondary products in input-output analysis. Rev Econ Stat 1984;66(1):88-97.

[16] ten Raa T. An alternative treatment of secondary products in input-output analysis: Frustration. Rev Econ Stat. 1988;70(3):535-538.

[17] Kop Jansen P, ten Raa T. The choice of model in the construction of input-output coefficients matrices. Int Econ Rev. 1990;31:213-27.

[18] Londero E. Secondary products, by-products and the commodity technology assumption. Econ Sys Res. 1999;11(2):195-203.

[19] Suh S, Huppes G. Economic Input-Output Analysis for Allocation in LCA: Annual SETAC-Europe meeting, Wien, Austria, 2002a.
[20] Leontief W W. Quantitative Input and Output Relations in the Economic Systems of the United States. Rev Econ Stat. 1936;18(3):105-125.
[21] United Nations. A System of National Accounts: Studies in Methods, Series F, No. 2 Rev. 3: New York, USA, 1968
[22] Suh S. Missing Inventory Estimation Tool (MIET) 2.0: http://www.leidenuniv.nl/cml/ssp/software/miet, CML, Leiden University, the Netherlands, 2001.
[23] Moriguchi Y, Kondo Y, Shimizu H. Analyzing the life cycle impact of cars: the case of CO_2. Industry and Environment, 1993: 16 (1-2), 42-45.
[24] Lave L, Cobas-Flores E, Hendrickson C, McMichael F. Using input-output analysis to estimate economy wide discharges. Environ Sci Technol. 1995:29(9):420-426.
[25] Hendrickson C, Horvath A, Joshi S, Lave L. Economic Input-Output Models for Environmental Life Cycle Assessment. Environ Sci Technol. 1998: 31 (7), 184-190.
[26] Lenzen M. Errors in Conventional and Input-Output-based Life Cycle Inventories. J Ind Ecol. 2001;4(4):127-148.
[27] Wilting H C. An energy perspective on economic activities: Ph.D. Thesis, University of Groningen, The Netherlands, 1996.
[28] Treloar G. Extracting embodied energy paths from input-output tables: towards an input-output-based hybrid energy analysis method. Econ Sys Res. 1997;9(4):375-391.
[29] Marheineke T, Friedrich R, Krewitt W. Application of a hybrid-approach to the life cycle inventory analysis of a freight transport task. SAE Technical Paper Series 982201: Total Life Cycle Conference and Exposition, Austria. 1998.
[30] Joshi S. Product Environmental Life-Cycle Assessment Using Input-Output Techniques. J Ind Ecol. 2000:3(2-3):95-120.
[31] Suh S, Huppes G. Missing Inventory Estimation Tool Using Extended Input-Output Analysis, Int J LCA. 2002b:7(3): 134-140.
[32] Suh S, Huppes G. Applications of Input-output analysis for LCA - with a case study of linoleum. Annual SETAC-Europe meeting, Madrid, Spain, 2001.
[33] Bullard CW, Pillati DA. Reducing uncertainty in energy analysis: CAC-doc. no. 205. Center for Advanced Computation, University of Illinois, Urbana, USA, 1976.
[34] Bullard CW, Penner PS, Pilati DA. Net energy analysis - handbook for combining process and input-output analysis. Resources and Energy. 1978;1:267-313.
[35] Suh S, Huppes G. Gearing input-output model to LCA - Part I: General framework for hybrid approach: CML-SSP Working Paper, CML, Leiden University, Leiden, Netherlands, 2000.
[36] Vogstad K-O, Strømman A, Hertwich E. Environmental impact assessment of multiple product systems: using EIO and LCA in a LP framework, in: 1st Industrial Ecology Conference, Leiden, the Netherlands, 2001.
[37] Strømman A. LCA of hydrogen production from a steam methane reforming plant with CO_2 sequestration and deposition. in: 1st Industrial Ecology Conference, Leiden, the Netherlands. 2001.

[38] Heijungs R. Chain Management by Life Cycle Assessment (CMLCA): http://www.leidenuniv.nl/cml/ssp/cmlca.html. CML, Leiden University, the Netherlands, 2000.

[39] Green Design Initiative. Economic Input-Output Life Cycle Assessment: http://www.eiolca.net. Carnegie Mellon University, US, 2004.

[40] ISO 14041 Environmental management - Life cycle assessment - Goal and scope definition and inventory analysis: International Organization for Standardization, Geneva, Switzerland, 1998.

[41] Suh S, Lenzen M, Treloar GJ, Hondo H, Horvath A, Huppes G, Jolliet O, Klann U, Krewitt W, Moriguchi Y, Munksgaard J, Norris G. System boundary selection in Life Cycle Inventories using hybrid approaches, Environ Sci Technol, 2004: 38 (3), 657-664.

VI. Material Flows in an Industry Network*

Abstract

In a recent paper in this journal, embodied land appropriation in international trade activities was analysed using a physical input-output table (Hubacek and Giljum 2003). The authors stated that there are significant differences between the physical and the monetary input-output tables in their results, which the authors argued to be due to the fact that the results from the monetary table are determined mainly by the monetary structure of final demand, while the structure of a physical table more closely resembles the 'physical realities' of an economy. In the present paper, it is argued that the methodological foundation that the authors based their analysis on is misleading and does not satisfy the overall material balance requirement. It is shown that the differences in the results between the monetary and physical tables presented by the authors have nothing to do with the resemblance to the physical realities. I also tried to further clarify a number of critical issues in applying physical input-output tables, related to double counting, treatment of wastes and the effect of closing the system toward direct material inputs. A number of consistent but different approaches to cope with these issues are presented, including their proofs. The embodied land appropriation of international trade activities is calculated and compared by applying those approaches. There are many advantages of using physical input-output tables, however, their superiority should not be exaggerated nor be regarded as absolute. Depending on how it is constructed and used, it is also possible that the results from a physical input-output table do not tell us more than that indeed some commodities are cheaper, or more costly, per unit of their mass.

Keywords: Physical input-output tables; Input-output analysis; International trade; Wastes; Double counting; Land appropriation

* Reprinted from "Suh, S. A Note on the Calculus for Physical Input-Output Analysis and its Application to Land Appropriation of International Trade Activities, *Ecological Economics*, 2004: 48 (1), 9-17" under the courtesy of Elsevier B.V.

1. Introduction

In a recent paper in this journal, embodied land appropriation by international trade activities of the EU-15 was analysed using a Physical Input-Output Table (PIOT) (Hubacek and Giljum 2003). The paper provided a good overview on related policy directives and on-going international efforts on the issue. The paper stated that there are significant differences in results between a PIOT and a Monetary Input-Output Table (MIOT), which the authors argued are due to the fact that the result from a MIOT is determined mainly by the monetary structure of the final demand, while the structure of a PIOT more closely resembles the 'physical realities' of an economy. The paper also presented interesting numerical results and discussed a number of critical issues in applying PIOTs, including problems with double counting and the treatment of wastes. Most of all, the authors successfully drew attention to PIOT as a prominent tool for broader application in ecological economics.

This paper aims first, to point out that the methodological foundation that the authors based their analysis on is flawed, and, due to this, the results and their interpretation are not appropriate. Second, it tries to further clarify a number of critical issues in applying PIOTs that are often disregarded. For the sake of convenience I directly utilise the numerical figures from their paper, as well as those in the report by the same authors (Giljum and Hubacek 2001) for underlying, more detailed data. Unless otherwise mentioned, I also follow Hubacek and Giljum (2003) for the terminology and the notations. All references are from this paper unless stated otherwise.

2. Calculus for Physical Input-Output tables

2.1. Method by Hubacek and Giljum (2003)

In their paper, Hubacek and Giljum (2003) presented a method to calculate the amount of land appropriation due to exports using a PIOT. There were two notable contributions that are of interest for further discussion in the current paper. The first one is about double counting (p. 140), where the materials balances in an economy as a whole and that at a sector level were rightly distinguished. The total material input of an economic system as a whole equals the total primary inputs plus changes in stocks, while on a sector level, the total material inputs are the primary inputs plus the secondary inputs from other industries. Therefore, due to this double counting, the sum of the total material inputs by all sectors will be much higher than that of the whole economy.

The second issue was about the treatment of wastes, which formed the core methodological foundation of the paper (pp. 142-144).

By using only final demand (Y) for our calculation we would underestimate the land requirements, as all materials not included in the economic output itself but necessary to satisfy final demand would not be considered.

The authors were pointing out that there are large amounts of waste that are not demanded by the final consumers, but must have induced material inputs, and, therefore, they should be incorporated in the calculation of the total material inputs. For that, the authors first divided total wastes (w) by total primary inputs (r') (p. 143).

$$C_w = \frac{w}{r'} \qquad (1)$$

In their article the distinction between scalars and matrices and vectors are not clear, but consulting the background computation shown in Giljum and Hubacek (2001) it was possible to understand that the equation (1) above actually was meant to be

$$C_w = \frac{i'w}{i'r} = \frac{w_{\text{total}}}{r_{\text{total}}}, \qquad (2)$$

where i is an addition operator, which is a column vector with 1s in relevant dimension, and w_{total} and r_{total} stand for the total wastes and the total primary inputs by all sectors, respectively. The resulting C_w is a scalar that shows the ratio of the total wastes by all sectors that is related to the total primary inputs by all sectors. Then the authors proceeded

$$r_w = r'C_w, \qquad (3)$$

of which the analytical meaning was given by the authors (p. 143):

By calculating r_w, we include primary inputs in the calculation over the detour of final demand.

But yet, neither the equation nor the nice explanation gives a direct intuitive understanding of the meaning of this operation. Perhaps it is helpful to rearrange the equation for the three-sector economy studied by them as

$$r_w = [r_1 \quad r_2 \quad r_3]C_w = [w_{\text{total}}\, r_1/r_{\text{total}} \quad w_{\text{total}}\, r_2/r_{\text{total}} \quad w_{\text{total}}\, r_3/r_{\text{total}}], \qquad (4)$$

where r_j stands for the primary inputs to the industry j. Equation (4) tells us that the operation actually redistributes the total wastes generated by all sectors in the proportion to the primary inputs by each sector in the total. With the r_w derived, the authors extended the final demand vectors such that (p. 143)

$$d_{ext} = d + (r_w S_d) \text{ and } e_{ext} = e + (r_w S_e), \qquad (5)$$

where the wastes redistributed to each sector were added to its domestic final demand (d) and export (e) in the proportion to d and e in the total final demand (S_d and S_e). Then, instead of e where wastes were not accounted for, the derived e_{ext} was applied to the problem of land appropriation through different exports, and the results are compared with those by MIOT (p. 144). The comparison between the results from the PIOT and the MIOT showed considerable differences between the two: MIOT estimated that the secondary sector is by far highest in its total land appropriation although the primary sector uses a larger land area per unit of monetary output, whereas PIOT showed the opposite. The authors provided an explanation (p. 144):

> This is due to the fact that the monetary vector of exports is by far dominated by the industrial sector [...]. Therefore, results in the MIOT example are mainly determined by the monetary structure of the final demand vector, whereas the physical information integrated in the form of land coefficients has only a small influence on results. [...] The structure of the PIOT more closely resembles the physical realities of the economy and thus its application for calculating land appropriation will lead to considerable differences from the use of monetary IO tables.

From the following section I will argue that the method used and the interpretation made by the authors are not appropriate, and I will try to present more consistent methods and then compare the results using the same numerical values.

2.2. Overall Mass Balance in Hubacek and Giljum (2003)

In calculating the total direct and indirect material inputs using PIOT, Hubacek and Giljum faced a problem as wastes were produced by an industry, and thus were viewed as by-products, but were not demanded by the final consumers (Giljum and Hubacek 2001, and Hubacek and Giljum 2003). The authors argued that, due to this, the results of the calculation based on empirical data showed much lower values both for the total material inputs and the total land appropriation than was expected (Giljum and

Hubacek 2001). In order to correct this, they developed the method described in the previous section.

By assuming wastes to be by-products, from a theoretical point of view, it already violates one of the fundamental assumptions of input-output analysis (IOA), where the output of an industry is assumed to be unique and homogenous. Nonetheless, if a supply-and-use framework is considered, the by-products can be handled using better-known procedures such as the by-product technology assumption, the industry-technology assumption or the commodity-technology assumption (see eg. Stone et al. 1963, Steenge 1990 and Konijn 1994). The treatment of wastes presented by Hubacek and Giljum (2003), however, does not fall into any of the categories above. One can still assume that the wastes are part of the homegeneous output of the sector following the basic assumptions in IOA. However, then the wastes should be consistently treated in that way for the final demand as well, which was not the case in the paper either. This problem has led to an inconsistency in overall material balance in their results, which can be checked easily.

I first start with the overall mass balance of inputs, for which I borrowed the entire Table 9 from the paper. I made only a few very small changes, to balance the input and output mass. However, these changes do not lead to any visible differences in the final results (Table 1).

Assuming no changes in stock, the overall material balance in a PIOT can be summarised as

$$r = \hat{r}_c (I - A)^{-1} y, \qquad (6)$$

where r denotes the primary material inputs by each industry, $\hat{r}_c$ does the diagonalised primary material inputs coefficient, A does the direct secondary material inputs and y does the total final demand as the sum of total domestic final demand (d) and exports (e).[1] The equation shows that the amount of the total direct primary materials use per sector due to the total final demand equals the total primary inputs vector, r. The proof can be easily developed where the equation can be shown to be equivalent to the balancing equation in an input-output table, $x - Zi = y$ (total production minus total intermediate consumption by industries equals total final demand). Applying the numerical values in the Table 1, however, the method by Hubacek and Giljum (2003) fails to satisfy the equation (see Table 2).

[1] By diagonalising the final demand vector and transposing the primary materials inputs coefficient, the result, a row vector, shows the total material inputs attributed to each final demand.

2.3. A consistent calculus for physical input-output analysis

There are, however, a number of ways to deal with the problem, each based on a consistent set of principles.

Approach 1: Wastes are not treated as a part of the homogeneous output of a sector.

Waste is defined here as an output that has no or negative economic value. As soon as it has an economic value, then it should be treated as a secondary or by-product. Under the assumption that wastes are not part of the homogeneous industry output, the total industry output (x_1) is calculated in a PIOT by

$$x_1 = Zi + y. \qquad (7)$$

The primary inputs coefficient and the direct requirements matrix are calculated using the total industry output vector derived.

$$r_1 = r'\hat{x}_1^{-1} \text{ and } A_1 = Z\hat{x}_1^{-1} \qquad (8)$$

The total net material inputs by the domestic (*d*) and foreign (*e*) final demand is then calculated by

$$r = \hat{r}_1(I - A_1)^{-1} y, \qquad (9)$$

where $y = d + e$. When the numerical values from Table 1 are applied, the right-hand side of equation (9) equals the total primary material inputs to each sector, r (Table 2). Hence, the result is not an underestimation, even though the final demand part is reduced to usable outputs excluding wastes. That is due to the fact that the primary input-coefficients and the direct requirements matrix are scaled up accordingly by using the reduced total output vector, x_1 (see the Appendix for a simple proof).

Approach 2. Wastes are treated as a part of the homogenous output of a sector

Alternatively we can also assume that the wastes are part of the homogenous output of an industry. Under the assumption of only one and unique homogenous output for each sector total industry output is defined as

$$x_2 = Zi + y + w. \qquad (10)$$

Then the primary inputs coefficient and the direct requirements matrix are calculated by

$$r_2 = r'\hat{x}_2^{-1} \text{ and } A_2 = Z\hat{x}_2^{-1}. \qquad (11)$$

Since wastes are also assumed to be a part of the homogenous output, the overall material balance is established by including wastes in the total final demand such that

$$r = \hat{r}_2(I - A_2)^{-1}(y + w). \qquad (12)$$

Applying the numerical values in the Table 1, the right-hand side of the equation (12) again equals the primary inputs to each sector, r (Table 2). Thus, inclusion or exclusion of wastes in the total industry output does not affect the overall material balance if principles are applied consistently (see Appendix for a simple proof).[2]

Approach 3. Primary materials are treated as intermediate inputs

In Giljum and Hubacek (2001), an another approach was explored by the authors but was not properly interpreted. In this approach, the primary inputs are endogenised into the direct requirements matrix. This can be easily done by adding r as an additional row and by adding a spurious column for the primary inputs sector. The augmented matrix and vectors are

$$Z_3 = \begin{bmatrix} Z & 0 \\ r' & 0 \end{bmatrix},\ x_3 = \begin{bmatrix} x_1 \\ i'r \end{bmatrix},\ d_3 = \begin{bmatrix} d \\ 0 \end{bmatrix} \text{ and } e_3 = \begin{bmatrix} e \\ 0 \end{bmatrix}. \qquad (13)$$

By doing so, the system is said to be closed towards the primary material inputs. Since the primary material inputs are endogenised as a part of intermediate inputs, there is no need to prepare the inputs coefficient in this case to calculate the total material inputs. The direct requirements matrix is calculated by

$$A_3 = Z_3\hat{x}_3^{-1} \qquad (14)$$

Then the overall material balance is made such that

$$M_3 = (I - A_3)^{-1} y_3, \qquad (15)$$

[2] Note that the wastes from each sector in equation (12) are treated just as the products from the sector under a consistent assumption that wastes are part of the homogenous output of each sector.

Table 1. Three-sector PIOT for Germany 1990 (Million tons)

	Primary sector	Secondary sector	Tertiary sector	Disposal to nature	Final demand		Total output
					Domestic	Exports	
Primary sector	2247.7	1442.2	336.2	2404.8	46.8	36.7	6514.4
Secondary sector	27.4	1045.4	206.2	846.6	552.5	155.9	2834
Tertiary sector	5.1	68.5	50.9	1000.4	16.3	20.0	1161.2
Primary material inputs (domestic extraction and imports)	4234.2	277.9	567.9				
Total input	6514.4	2834	1161.2				

Table 2. Overall mass balance in primary inputs by its originating sectors (Billion tons)

	Direct inputs (r)	Approach 1	Approach 2	MIOT	Hubacek & Giljum (2003)
Primary sector	4.23	4.23	4.23	4.23	4.63
Secondary sector	0.28	0.28	0.28	0.28	0.17
Tertiary sector	0.57	0.57	0.57	0.57	0.29
Total	5.08	5.08	5.08	5.08	5.08

where $y_3 = d_3 + e_3$. The column sum of the M_3 shows the total *gross* material inputs in which secondary inputs are double counted. However, contrary to what was assumed by Giljum and Hubacek (2001), one can quite well distinguish the net inputs (primary material inputs) from the gross figures within this approach as well: the primary material inputs are shown in the last row as it was assumed to be the last input. In Giljum and Hubacek (2001) the total material requirements were calculated by summing up all elements of each column. In this case the material inputs figure shows the double counted, gross inputs rather than net inputs, and thus calculated results for the total direct and indirect factor inputs such as land appropriation using these figures are too high. Furthermore, it can be easily proven that the result by Approach 3 is not different from that of Approach 1 (see the Appendix).[3]

It can also be easily checked that the overall material balance equally holds for the MIOT using the values as appeared in their paper (p. 148) (see Table 2).

As Approach 3 reduces to Approach 1, only two different approaches have been presented in this paper, which deal with the wastes in a PIOT in an internally consistent way. Both of them conform to the overall mass balance principle when they are attributed to the sectors that the primary inputs originally used, but still they generate different results when they are attributed to specific final demand items. Although neither approach can be said to be 'more correct' than the other in terms of their methodological consistency, one can still argue that one assumption is more realistic than the other. The choice, then, seems obvious (see section four below).

3. Application to Land Appropriation in International Trade

In this section the data on land appropriation through international trade activities are applied using four different approaches including the first two approaches in the previous section, the approach using MIOT and the one by Hubacek and Giljum (2003). For the sake of simplicity, the data for land appropriation and exports in the paper are directly used.

In the Table 3 the overall balance of the land appropriation derived from the four methods are compared (see equations (6) (9) and (12)). Again, the first three methods satisfy the balancing equation, while the last method shows small, but meaningful differences.

[3] Or the approach can also be equivalent to the Approach 2 depending on how the x_3 is formulated. The proof on the equivalency between the Approach 2 and 3 can be test by changing the equations (13) and (14) accordingly, which is here left for the readers.

Table 3. Overall balance in land appropriation by its originating sectors (Million ha of land appropriation)

	Direct land use	Approach 1	Approach 2	MIOT	Hubacek & Giljum (2003)
Primary sector	21.0	21.0	21.0	21.0	23.0
Secondary sector	1.9	1.9	1.9	1.9	1.1
Tertiary sector	1.6	1.6	1.6	1.6	0.8
Total	24.5	24.5	24.5	24.5	24.9

The methods are then applied to estimate the embodied land appropriation of export activities (see Figure 1). The result from the Approach 1 resembles that from the MIOT, while that from the Approach 2 resembles the method by Hubacek and Giljum (2003). The Approach 1 and the MIOT estimate that the secondary products are responsible for the majority of the land appropriation of exports, while the other two show that the primary products dominate the total land appropriation of exports.

These differences have nothing to do with the 'resemblance with the physical realities' of PIOTs, as the results from a consistent PIOT approach may be similar to that from a MIOT (see Approach 1 and MIOT). Nor does it prove the superiority of the physical tables over the monetary table. The differences in results between PIOT and MIOT that Hubacek and Giljum observed are, in fact, due to 1) the mistreatment of the waste, which has led to the differences between the Approach 2 and the method by Hubacek and Giljum (2003); 2) the different assumptions in treating the wastes, which has led to the differences between the Approach 1 and Approach 2; and 3) the differences in mass per unit of monetary value of industry outputs, which has led to the differences between the Approach 1 and the MIOT. The pure difference between the PIOT and MIOT (Approach 1 vs. MIOT) is relatively small. The major differences in the results between the approaches are due mostly to the different principles in treating wastes (Approach 1 vs. Approach 2).

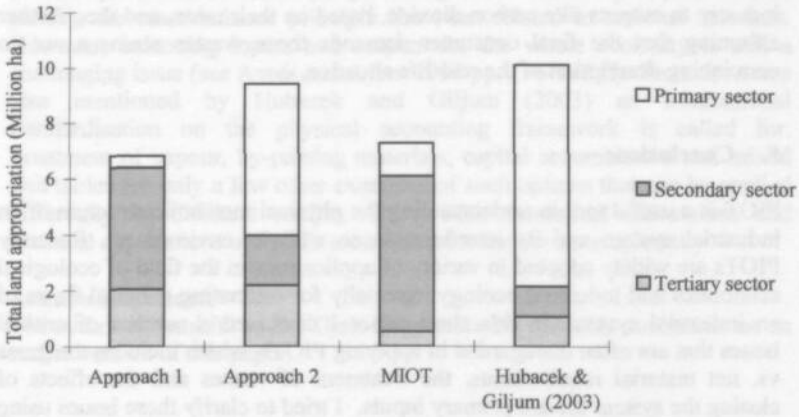

Figure 1. Total direct and indirect land appropriation by German export

4. Which one is 'correct'?

A natural question is, of course, whether the Approach 1 or the Approach 2 is correct. As mentioned before, perhaps, it is not a good question as both Approach 1 and Approach 2 are correct in the light of the assumptions on which each method has been built. Nevertheless, we can still think about the soundness of the two assumptions. In the Approach 1 it is assumed that the usable output of an industry is responsible for the whole factor inputs to the industry regardless of whether they are actually used to generate wastes or to produce usable product. Considering the fact that the very motivation for a productive process to be operated, and, thus, for the wastes to be generated by the process, is the economic value of the usable outputs from the process, this assumption seems to quite reasonably reflect realities of life.

Approach 2 assumes that the waste and the usable output of an industry are equally responsible for the factor inputs to the industry, in the proportion to their mass. According to Material Flow Analysis (MFA) studies, carbon dioxide, construction and demolition debris and water vapour constitute the major part of the outputs by mass in a modern economy. These outputs are normally not reflected in the inter-industry transactions, and thus, Approach 2 relies more on the volume of final demand, where the wastes are included, than the indirect supply-chain effect through input-output relations. As a results, direct land appropriation is responsible for 48% of the total land appropriation by the extended exports in Approach 2, while that was only 7.8% in Approach 1. Attributing the major part of the factor inputs of an industry to outputs like carbon dioxide, based on their mass, and then further assuming that the final consumer demands those wastes seems a not so convincing description of the real-life situation.

5. Conclusions

PIOT is a useful tool in understanding the physical metabolic structure of an industrial system and its interdependence with its environment. Recently PIOTs are widely adopted in variety of applications in the field of ecological economics and industrial ecology especially for estimating material flows of an industrial system. In this short paper I discussed a number of critical issues that are often disregarded in applying PIOTs, which includes the gross vs. net material requirements, the treatment of wastes and the effects of closing the system toward primary inputs. I tried to clarify these issues using the numerical values as are appeared in Hubacek and Giljum (2003).

It is certainly true that PIOT has many advantages as compared to MIOT. However, the superiority of PIOTs should not be exaggerated nor be

regarded as absolute. Depending on how they are constructed and used, it is possible that the results from a PIOT do not tell us more than that there are indeed some commodities cheaper, or more costly, per unit of its mass.

The major advantages of PIOTs are more subtle ones e.g. that, using physical quantities, the accounting framework can be free from the price inhomogeneity and fluctuation and different taxation schemes and subsidies, which may distort the actual physical flows between industries when a monetary unit alone is considered. However, for many industries, for instance, service industries, the monetary flows are more important than the physical flows in describing them. Even for non-service industries, like the electric utility sector, the usefulness of the information on their output in mass units is doubtful (cf. eg. Suh, 2002). Furthermore, PIOTs, as are currently practised, are generally poorer in a number of important characteristics such as the level of detail in their industry classification, the source data quality and the methodological consistency between different tables. Therefore, it is a case-specific question whether the benefits of using a PIOT outweigh its disadvantages. For instance, with the level of aggregation and the data age of the PIOTs that the paper by Hubacek and Giljum (2003) used, the potential benefits of PIOTs could quite well have been dominated by the high level of aggregation and the source data uncertainty, even if a correct method had been used.

Nevertheless, there are merits in using PIOTs. In order to realise the benefits of PIOTs, there are yet many obstacles to be overcome. First, developments in basic data and statistics are in utmost need. Since Ayres and Kneese (1968), the mass balance principle has been related to national accounts. However, balancing inputs and outputs for the whole economy is still a challenging issue (see Ayres and Ayres 1998 pp. 176-196 ff). Second, as was also mentioned by Hubacek and Giljum (2003) an international standardisation on the physical accounting framework is called for. Treatment of vapour, by-passing materials, capital accumulation and mixed unit tables are only a few other examples of such options that can be applied differently by different studies. Third, both theoretical discussions and practical applications of PIOTs are needed for further development.

Acknowledgements
The author is thankful to Dr. Gjalt Huppes for his valuable comments on an earlier version of this paper.

References

Ayres R. U., Ayres L. W. (1998). Accounting for resources, 1. Edward Elgar, Cheltenham, UK.

Ayres, R. U., Kneese, A. V. (1969). Production, Consumption, and Externalities, The American Economic Review, 59 (3) 282-297.

Giljum, S., Hubacek, K. (2001). International trade, material flows and land use: developing a physical trade balance for the European Union. Interim Report IR-01-059, International Institute for Applied Systems Analysis, Laxenburg, Austria.

Hubacek, K., Giljum, S. (2003). Applying physical input-output analysis to estimate land appropriation (ecological footprints) of international trade activities. Ecological Economics, 44, 137 – 151.

Konijn, P.J.A. (1994). The make and use of commodities by industries -On the compilation of input-output data from the national accounts. Ph.D. thesis, University of Twente, Twente, the Netherlands.

Steenge, A.E. (1990). The commodity technology revisited -Theoretical basis and an application to error location in the make-use framework, Economic modeling, Vol. 7, 376-387.

Stone, R., Bacharach, M., Bates, J. (1963). Input-Output Relationships, 1951-1966, Programme for Growth, Volume 3. London, Chapman and Hall.

Suh, S., (2003). Functions, commodities and environmental impacts in an ecological-economic model, Ecological Economics, In Press.

Appendix

Proposition 1: $r = \hat{r}_1 (I - A_1)^{-1} (d + e)$

Proof:

$r = \hat{r}\hat{x}_1^{-1} (I - Z\hat{x}_1^{-1})^{-1} (d + e)$ by (8)

$\Leftrightarrow x_1 \hat{r}^{-1} r = (I - Z\hat{x}_1^{-1})^{-1} (d + e)$

$\Leftrightarrow (I - Z\hat{x}_1^{-1}) x_1 = d + e$

$\Leftrightarrow x_1 - Zi = d + e$

by (7)

Q.E.D.

Proposition 2: $r = \hat{r}_2 (I - A_2)^{-1} (d + e + w)$

Proof:

$r = \hat{r}\hat{x}_2^{-1} (I - Z\hat{x}_2^{-1})^{-1} (d + e + w)$ by (11)

$\Leftrightarrow \hat{x}_2 \hat{r}^{-1} r = (I - Z\hat{x}_2^{-1})^{-1} (d + e + w)$

$\Leftrightarrow (I - Z\hat{x}_2^{-1}) x_2 = d + e + w$

$\Leftrightarrow x_2 - Zi = d + e + w$

by (10)

Q.E.D.

Proposition 3: $\left[r_1 (I - A_1)^{-1} \hat{y} \;\vdots\; 0 \right] = \left((I - A_3)^{-1} \hat{y}_3 \right)_k$, *where k is the last index.*

Proof:

$$\Leftrightarrow \left[r_1(I-A_1)^{-1}\hat{y} \;\vdots\; 0\right] = \left((I - \left[\begin{array}{c:c} Z & 0 \\ \hdashline r' & 0 \end{array}\right] \left[\begin{array}{c:c} \hat{x}_1 & 0 \\ \hdashline 0 & i'r \end{array}\right]^{-1})^{-1} \hat{y}_3 \right)_{k.} \quad \text{by}$$

(13) and (14)

$$= \left((I - \left[\begin{array}{c:c} Z & 0 \\ \hdashline r' & 0 \end{array}\right] \left[\begin{array}{c:c} \hat{x}_1^{-1} & 0 \\ \hdashline 0 & (i'r)^{-1} \end{array}\right])^{-1} \hat{y}_3 \right)_{k.}$$

$$= \left((I - \left[\begin{array}{c:c} A_1 & 0 \\ \hdashline r'\hat{x}_1^{-1} & 0 \end{array}\right])^{-1} \hat{y}_3 \right)_{k.}$$

$$= \left(\left[\begin{array}{c:c} I - A_1 & 0 \\ \hdashline -r'\hat{x}_1^{-1} & 1 \end{array}\right]^{-1} \hat{y}_3 \right)_{k.}$$

$$= \left(\left[\begin{array}{c:c} (I-A_1)^{-1} & 0 \\ \hdashline r'\hat{x}_1^{-1}(I-A_1)^{-1} & 1 \end{array}\right] \left[\begin{array}{c:c} \hat{y} & 0 \\ \hdashline 0 & 0 \end{array}\right] \right)_{k.} \quad \text{by (13)}$$

$$= \left(\left[\begin{array}{c:c} (I-A_1)^{-1}\hat{y} & 0 \\ \hdashline r'\hat{x}_1^{-1}(I-A_1)^{-1}\hat{y} & 0 \end{array}\right] \right)_{k.}$$

$$= \left[r_1(I-A_1)^{-1}\hat{y} \;\vdots\; 0\right]$$

Q.E.D.

VII. Materials and Energy Flows in an Ecosystem Network*

Abstract

Materials and energy flow analysis (MEFA) has been widely utilized in ecology and economics, occupying unique positions in both disciplines. The various approaches to materials and energy flow analysis in ecology are reviewed, the focus being on the linear network system introduced from input-output economics. After its introduction in the early 1970s, the calculus and system definition for materials and energy flow analysis have been diversified, causing problems in comparing the results of different studies. This paper uses a materials and energy flow analysis framework that is a generalization of the major approaches in ecology and economics to illuminate the differences and similarities between the approaches on the basis of a set of consistent principles. The analysis often shows that seemingly different calculus and interpretations employed by different approaches eventually lead to the same outcome. Some issues of interpretations that conflict or require cautious interpretation are further elaborated. A numerical example is presented to test the generalized framework, applying major analytical tools developed by other approaches. Finally, some parallels, convergents, and divergents of the perspectives of ecology and economics and their implications for endogenized resources economy are discussed as they are reflected in the materials and energy flow analysis frameworks.

Keywords: input-output analysis, network analysis, environ analysis, materials and energy flow analysis

* Originally, Suh, S., 2004: A Comparison of Materials and Energy Flow Analysis in Ecology and Economics, *Submitted*.

1. Introduction

Since Lotka (1925) and Lindeman (1942), materials and energy flows have been among the central issues in ecology (Lindeman, 1942; Lotka, 1925). Energy flows in ecological systems have often been presented in the form of so-called Lindeman spines, which illustrate uptake, utilization, and dissipation of energy in a chain-like diagram. A more comprehensive representation of energy flows based on a network structure rather than a chain was introduced in the 1970s (Heal and MacLean, 1975). However, a consistent framework that describes the complex network structure of an ecosystem was still not readily available. It was Hannon (1973) who first introduced the use of a system of linear equations, taken from input-output economics, to analyze the structure of energy utilization in an ecosystem (Hannon, 1973). Using an input-output framework, the complex interactions between trophic levels or ecosystem compartments can be modeled, taking all direct and indirect relationships between components into account.

Shortly after its introduction, the Hannon's approach was adopted by various ecologists. Finn (1976, 1977) developed a set of analytical measures to characterize the structure of an ecosystem using a rather extensive reformulation of the approach proposed by Hannon (1973) successfully demonstrating how some key properties of a complex network system could be extracted (Finn, 1976; Finn, 1977). Finn's Cycling Index (FCI), for instance, is still one of the most frequently applied indicators in ecological network analyses. The contributions by Finn (1976, 1977) have led the materials and energy flow analysis framework to be more widely utilized in general ecological applications (Baird et al., 1991; Baird and Ulanowicz, 1989; Heymans and Baird, 1995; Heymans and Baird, 2000a; Heymans and Baird, 2000b; Heymans and McLachlan, 1996; Loreau, 1998; Szyrmer and Ulanowicz, 1987; Vasconcellos et al., 1997). For instance, Baird et al. (1991) evaluated E.P. Odum's definition of ecosystem maturity using FCI. The analysis of six marine ecosystems by Baird et al. (1991) showed that FCI and system maturity were inversely correlated. The result was generally confirmed by Vasconcellos et al.(1997) on 18 marine trophic models.

Another important development in the materials and energy flow analysis tradition in ecology is *environ* analysis. Patten (1982) proposed the term environ to refer to the relative interdependency between ecosystem components in terms of nutrient or energy flows. Results of environ analysis are generally presented as a comprehensive network flow diagram, which shows the relative magnitudes of materials or energy flows between the ecosystem components through direct and indirect relationships (Levine, 1980; Patten, 1982; Patten et al., 1990).

Finally, R.E. Ulanowicz and colleagues have broaden the value of materials and energy flow analysis both theoretically and empirically. A comprehensive study on Chesapeake Bay by Baird and Ulanowicz (1987) found that the extended diets of bluefish and striped bass they calculated showed considerable differences, although, as both are pelagic piscivores, the differences in their direct diets are not apparent. The finding helped to explain why the concentration of the pesticide Kepone detected in the flesh of bluefish was much higher than that in striped bass. The methodology used in Baird and Ulanowicz (1987) is based on, for instance, Szyrmer and Ulanowicz (1987).

These important developments in the materials and energy analysis tradition in ecology were rather isolated from major developments in network analysis in economics, notably Input-Output Analysis (IOA). Szyrmer & Ulanowicz (1987) wrote:

> Unfortunately, the authors are aware of no instance in which these novel adaptations of IOA by ecologists have been implemented by economists.

An economist perhaps could have made a similar statement. Because of the lack of interaction with input-output economics and the different needs of ecologists, the materials and energy flow analysis tradition in ecology has followed its own path, resulting in considerable differences in its appearance from that used in economics. Furthermore, the system definitions and calculi used by different studies are surprisingly different from each other, hampering a fruitful communication among ecologists themselves.

The present paper reviews the tradition of Materials and Energy Flow Analysis (MEFA) in ecology. The existing approaches are analyzed and compared by means of a MEFA framework that represents a generalization of the major approaches. The analysis presented here may be used as a point of departure in facilitating a common language and dialogue between and among the network flow analysts in ecology and economics.

In this paper, bold characters represent matrices (upper case) and vectors (lower case), while lower case italics are used for scalars and elements of the corresponding matrix or vector (with subscripts). Prime ($'$) denotes transpose of matrices or vectors. Italics of i, j, and m are used as indices for ecosystem components and k for energy or nutrient inputs from outside the system.

2. The Tradition of Materials and Energy Flow Analysis in Ecology

The calculi and the system definitions of major MEFA approaches in ecology are summarized below, emphasizing their similarities and differences.

2.1. Hannon (1973)

The system that Hannon (1973) concerns is a freshwater ecosystem at an aggregated level. Let p_{ij} be the amount of energy consumed by j on i for a given period.[1] Note that p_{ij} includes not only the energy flow within the ecosystem components but also primary energy flows from outside the ecosystem. The net system loss of energy is called respiration in Hannon (1973) and denoted by r.[2] The total production of energy e is calculated by

(1) $$e_i = \sum_j p_{ji} + r_i,$$

where the total production of energy by i equals the total consumption by ecosystem components plus the net energy loss by the system. Let g_{ij} be the amount of energy consumed by the ecosystem component j on i per unit production of energy by j, such that $p_{ij} = g_{ij}e_j$. By substituting p_{ij} in equation (1) we obtain

(2) $$e_i = \sum_j g_{ij}e_j + r_i,$$

Using matrix formalism, equation (2) is written as

(3) $$\mathbf{e} = \mathbf{G}\mathbf{e} + \mathbf{r},$$

and is solved for $\mathbf{e}$ by

(4) $$\mathbf{e} = (\mathbf{I} - \mathbf{G})^{-1}\mathbf{r},$$

where $\mathbf{I}$ refers to an identity matrix with relevant dimension. Equation (4) can be used to calculate the amount of production by each ecosystem component required producing a given amount of net system output. With the diagonalized respiration vector $\hat{\mathbf{r}}$, the same equation generates the energy

[1] Section 2 uses the original notation used in the studies referred to, as long as they do not conflict with each other, for the convenience of tracing back the original references. A new set of notations is introduced in section 3; the relations between them and the notations used by the studies referred to in section 2 are shown in appendix A.

[2] Energy is lost by an ecosystem component via respiration, export, and changes in stock. Hannon (1973) referred to these three mechanisms of net system loss of energy collectively as "respiration" (Hannon, 1973. P. 538).

flow matrix, showing the direct and indirect energy flows between ecosystem components and primary energy sources for a given net system output.

It should be noted that, strictly speaking, the above exposition of MEFA calculus by Hannon (1973) differs from those used most commonly in input-output analysis. Hannon (1973) included primary energy inputs such as solar energy as part of the intermediate part of the system. In input-output economics, this corresponds to including the production and consumption of "labor" within the intermediate part of the system. Such a treatment, called "closure toward primary input", was not unknown to economists but was not common practice either. Except for the fact that the primary inputs are endogenized in the system, the approach by Hannon (1973) so far generally conforms to those used in input-output economics.

What is very peculiar in Hannon (1973) but has not been fully acknowledged by his followers is the following:

> Multiplying each component's coefficients by the direct energy flow from that component [...] reveals the relative dependence of each component on the two energy sources.

Hannon (1973) does not provide a mathematical notation for the operation quoted above, but presents the result in a table. Using matrix notation, the description in Hannon (1973) can be rewritten as

$$\mathbf{\Pi} = (\mathbf{I} - \mathbf{G})^{-1}\hat{\mathbf{e}}, \tag{5}$$

if we limit ourselves to the part involving primary energy sources.[3] Obviously, post-multiplication of the total production value ($\mathbf{e}$) to the Leontief inverse is not common practice in input-output economics. In Hannon (1973), the resulting matrix $\mathbf{\Pi}$ is interpreted as *the distribution of primary energy inputs over ecosystem components*. This issue will be further elaborated in another part of this paper.

2.2. Finn (1976, 1977) and Patten et al. (1976)

The MEFA framework proposed by Hannon (1973) was adapted by Finn (1976, 1977) with substantial reformulation. The method proposed by Finn (1976, 1977) uses large concatenated matrices and introduces various new terms. The approach in Finn (1977) explicitly incorporates changes in stock, relaxing the steady-state condition generally imposed in a network system. Furthermore, the direction of flows represented in the matrices proposed by

[3] Table 5 in Hannon (1973).

Finn (1976, 1977) is the opposite of that in Hannon (1973). Let **P** describe the energy or materials flows within an ecosystem and between the ecosystem and its environment

$$\mathbf{P} = \begin{bmatrix} \mathbf{0} & \mathbf{0} & \mathbf{0} \\ \mathbf{P}_{21} & \mathbf{P}_{22} & \mathbf{0} \\ \mathbf{0} & \mathbf{P}_{32} & \mathbf{0} \end{bmatrix}, \tag{6}$$

where $\mathbf{P}_{21}$ describes the flows to the system from the environment, $\mathbf{P}_{22}$ those within the system, and $\mathbf{P}_{32}$ those from the system to the environment and the changes in stock.[4] Detailed descriptions of all submatrices can be found in Appendix A. The elements in **P** are divided by its non-zero row sum, and the result is denoted by $\mathbf{Q}^*$.

$$\mathbf{Q}^* = \begin{bmatrix} \mathbf{0} & \mathbf{0} & \mathbf{0} \\ \mathbf{Q}^*_{21} & \mathbf{Q}^*_{22} & \mathbf{0} \\ \mathbf{0} & \mathbf{Q}^*_{32} & \mathbf{0} \end{bmatrix}. \tag{7}$$

Matrix $\mathbf{Q}^*$ is further inverted to form $\mathbf{N}^* = (\mathbf{I} - \mathbf{Q}^*)^{-1}$.

$$\mathbf{N}^* = \begin{bmatrix} \mathbf{I} & \mathbf{0} & \mathbf{0} \\ \mathbf{N}^*_{21} & \mathbf{N}^*_{22} & \mathbf{0} \\ \mathbf{N}^*_{31} & \mathbf{N}^*_{32} & \mathbf{I} \end{bmatrix} \tag{8}$$

Finn (1977) used the term *Transitive Closure Inflow matrix* for $\mathbf{N}^*$. The meaning of the elements in $\mathbf{N}^*$ is rather difficult to see from equation (8). Patten et al. (1976) interpret $\mathbf{N}^*_{22}$ as the total production by ecosystem components necessary for the system net output, which is equivalent to the part in $(\mathbf{I} - \mathbf{G})^{-1}$ that represents exchanges within ecosystem components. The famous Finn's Cycling Index (FCI) appears in the diagonal of $\mathbf{N}^*_{22}$. Finn (1977) called this type of analysis *creaon* flow analysis.

Finn (1977) also proposed another approach, called *genon* flow analysis. According to Finn (1977), genon flow analysis shows the structure of the distribution of primary inputs over ecosystem components and net system output. Recall the quotation from Hannon (1973) and equation (5), which

[4] In the original formulation by Finn (1976, 1977), the term *changes in stock* is divided into two, negative and positive, and distributed into $\mathbf{P}_{21}$ and $\mathbf{P}_{32}$, respectively. For the sake of simplicity, they have here been reduced to one term by varying signs.

proposes the same analysis. However, the procedure proposed by Finn (1976, 1977) is completely different from that of Hannon (1973). Finn divided the elements in **P** by its column sum instead of its row sum, which results in $\mathbf{Q}^{**}$, and then proceeded to the inversion, $\mathbf{N}^{**} = (\mathbf{I} - \mathbf{Q}^{**})^{-1}$.[5]

$$\mathbf{N}^{**} = \begin{bmatrix} \mathbf{I} & \mathbf{0} & \mathbf{0} \\ \mathbf{N}_{21}^{**} & \mathbf{N}_{22}^{**} & \mathbf{0} \\ \mathbf{N}_{31}^{**} & \mathbf{N}_{32}^{**} & \mathbf{I} \end{bmatrix} \tag{9}$$

Matrix $\mathbf{N}^{**}$ is called the *Transitive Closure Outflow matrix*. According to Patten et al. (1976), the *i–j*th element of $\mathbf{N}_{22}^{**}$ shows the amount of *i* produced by a unit flow originating from *j*. The element, the *i–j*th element of $\mathbf{N}_{32}^{**}$, is the amount of system net output or stock change of *i* enabled by a unit flow from *j*.

A number of questions arise. First, the calculus used by Finn (1976, 1977) for genon analysis is very different from that used by Hannon (1973), although both seem to share the same goal of revealing the structure of materials or energy distribution. Second, the interpretation of the submatrices in $\mathbf{N}^{**}$ by Patten et al. (1976) is not exactly about the distribution of inputs, which is supposed to be the intention. Has either Hannon (1973) or Finn (1976, 1977) failed to achieve what was intended? Or is the interpretation by Patten et al. (1976) misleading? Obviously, the answers to both questions cannot be negative at the same time.

2.3. Szyrmer and Ulanowicz (1987)

Szyrmer and Ulanowicz (1987) separated primary inputs and system net outputs from the exchanges between ecosystem components. Consider a system

$$\mathbf{x} = \mathbf{A}\mathbf{x} + \mathbf{y}, \tag{10}$$

where x_i denotes the total production (either materials or energy) by ecosystem component *i*, a_{ij} the direct input from *i* used to produce one unit of output by *j*, and y_i the amount of *i* that leaves the system to environment. The equation is then solved for **x** by

[5] In Hannon (1973), the coefficient matrix **G** is prepared by $g_{ij} = p_{ij}/e_j$ but the operation used for the preparation of $\mathbf{Q}^{**}$ by Finn (1976, 1977), which is equivalent to $g_{ij} = p_{ij}/e_i$ in Hannon's system, does not even appear.

(11) $$\mathbf{x} = (\mathbf{I} - \mathbf{A})^{-1}\mathbf{y},$$

which is a standard form in input-output economics. Szyrmer and Ulanowicz (1987) then rightly point out the difference in perspective between economics and ecology by saying that

> Economists are primarily interested in what leaves a system – the final outputs or demands. However, final outputs are relatively less interesting to ecologists [...]. [...] the ecologist is more interested in the total effect which the output from *i* has on the total output of *j*.

The above quoted part leads to a new measure *gross flow*. According to Szyrmer and Ulanowicz (1987), the gross flow from *i* to *j* is estimated by "scaling up" the final output y in (11) to the total production x such that

(12) $$\mathbf{Z}^{G} = (\mathbf{D} - \mathbf{I})\hat{\mathbf{x}},$$

where **D** refers to $(\mathbf{I} - \mathbf{A})^{-1}$ in (11) (cf. equation (5)). Szyrmer and Ulanowicz (1987) also proposed another measure called *total flows*. According to them, the question in the total flow is "What happens if *i* is prevented from influencing *j*?". They found that this question can be answered by the equation

(13) $$z_{ij}^{T} = [(d_{ij} - \delta_{ij}) / d_{ij}]x_j,$$

where d_{ij} are the corresponding elements in **D**, δ_{ij} the elements of the identity matrix, and x_j the total production of *j*. Szyrmer and Ulanowicz (1987) argued that the network properties are more closely related to the total flow than other input-output measures and further that the structure of input-output analysis appears more "nearly canonical" when built around total flows than the Leontief inverse.

2.3. Patten (1982)

The most comprehensive analysis of the interrelationships between ecosystem components in the MEFA framework might be environ analysis (for a comprehensive review, see (Fath and Patten, 1999)). Environ analysis reveals the relative interdependencies between ecosystem components with regard to materials and energy flows. Input environ analysis shows the relative materials or energy requirements by components per unit of net system output. Output environ analysis concerns the relative materials and energy distribution per unit of primary input.

The rather complex accounting structure by Finn (1976) exhibits analytical power when it comes to the environ analysis. The input environ analysis and the output environ analysis are carried out in one step for each net system output m or primary inputs k by

$$\mathbf{E}^{\Lambda,m} = \hat{\mathbf{N}}^{*}_{m}\mathbf{Q}^{*}, \tag{14}$$

and

$$\mathbf{E}^{\Omega,k} = \hat{\mathbf{N}}^{**}_{k}\mathbf{Q}^{**}, \tag{15}$$

respectively. Matrix $\hat{\mathbf{N}}^{*}_{m}$ is a diagonalized mth row in matrix $\mathbf{N}^{*}$, where m is an index for system net outputs, and matrix $\hat{\mathbf{N}}^{**}_{k}$ is a diagonalized kth column in matrix $\mathbf{N}^{**}$, where k is an index for primary inputs. The i–jth element of $\mathbf{E}^{\Lambda,m}$ represents the amount of materials or energy flow from j to i that is required to produce one unit of net system output from m. Likewise the i–jth element of $\mathbf{E}^{\Omega,k}$ concerns the amount of energy or materials flow from j to i that is enabled by one unit of primary input from k.

3. A generalized framework for materials and energy flow analysis

In the development of MEFA approaches in ecology, little attention has so far been paid to horizontal integration and comparison between studies. Except for a few well-known indicators such as FCI, different studies often employ different sets of indicators, hampering communications and comparisons between results. The differences in system definitions are another source of difficulties in comparing and understanding the approaches (Table 1). In input-output economics, statistical bureaus have started to produce Physical Input-Output Tables (PIOTs) in recent decades, providing another basis for the MEFA approach to economic systems (Kratena et al., 1992; Kratterl and Kratena, 1990; Pedersen, 1999; Stahmer et al., 2003; Suh, 2003)

In this section, I introduce a generalized framework for MEFA that embraces existing approaches in both ecology and economics. The generalized MEFA framework is then used to illuminate the relationships between and within the existing approaches. Figure 1 shows a flow diagram of a generalized system. Each flow in the system that is denoted by an arrow may represent either a materials or an energy flow. The term used for each flow varies depending on the type of flow. For instance, r would be best referred to as "respiration" in an energy flow model, whereas "residues" or "wastes" would be used in a

Table 1. Comparison between system definitions of MEFA approaches

	Physical input-output analysis	Hannon (1973)	Finn (1977), Patten (1982)	Szyrmer and Ulanowicz (1987)
Flows within structural matrix	Inter-industry exchanges	Inter-ecosystem component exchanges, Primary energy inputs	Inter-ecosystem component exchanges, Primary energy inputs, Changes in stocks, Exports	Inter-ecosystem component exchanges
Flows outside the structural matrix	Final demand Primary resource inputs Wastes	Exports, Changes in stock, Respiration	-	Exports, Respiration,
Multiple primary inputs	Generally No	Yes	No	No
Stock Changes	Explicit	Implicit	Explicit	No
Bi-directional analysis	No	No	Yes	No

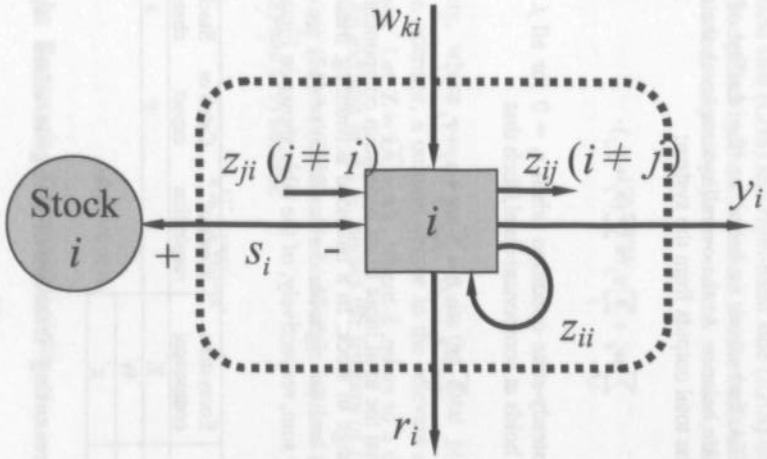

Figure 1. A flow diagram of a generalized input-output system

w_{ki}: primary input from k to i; z_{ij} $(i \neq j)$: flow from i to j; z_{ji} $(i \neq j)$: flow from j to i; z_{ii}: flow from i to i; r_i: waste (dissipative) flow to outside the system from i; y_i: usable (non-dissipative) flow to outside the system from i; s_i: stock change ($s_i > 0$ increase in stock, $s_i < 0$ decrease in stock).

nutrients or materials flow model in both ecological and economic applications. The flow w denotes primary inputs from outside the system, such as solar energy or net nutrient inflows and resource extraction. Similarly, y refers to matters like fishing catches, the amount harvested or final demand, z to the materials or energy flows between the ecosystem components or industries, and s to the changes in stock size, which can be positive, negative, or zero.[6] The broken line represents the overall system boundary. Note that treating the stock reserves as an exogenous component implies a relaxation of the steady-state condition required to satisfy mass and energy balances at all levels of the system.

The generalized MEFA framework is based on the duality of input-side balance and output-side balance. At the overall system level, the total inputs to the system equal the total outputs from the system:

$$\sum_{i,j} w_{ij} + \sum_{j} s_j = \sum_{j} (r_j + y_j) \cdot \tag{16}$$

The system is in a steady-state condition when $s_j = 0$ for all j. The same input-output balance holds at component level, such that

$$\sum_{i} (z_{ij} + w_{ij}) = \sum_{i} z_{ji} + s_j + r_j + y_j \cdot \tag{17}$$

Equation (17) says that the total input to an ecosystem component equals the total output plus change in stock. In a balanced accounting framework, the left-hand side (LHS) and the right-hand side (RHS) of (17) are simply the column sum and row sum, respectively, of the table shown in Figure 2.

From \ To	Ecosystem component	Waste or respiration	Catch or export	Stock change	sum
Ecosystem component	**Z**	**r**	**y**	**s**	**x**
Exogenous input	**W**				
sum	**x'**				

Figure 2. Basic accounting framework for generalized input-output system

The generality of the system definition presented above allows a more flexible system boundary definition. The broken line in the Figure 1 may be

[6] In input-output economics, the flows w, y, Z, and s are generally referred to as primary inputs, final demand, intermediate inputs and inventory adjustments.

further extended to internalize cross-boundary flows such as w, r or y, while equations (16) and (17), and the system definition above, still hold. For instance, closing the system toward primary inputs can be achieved by treating the materials or energy sources such as bread fed or solar energy as one of the ecosystem components (eg. Hannon, 1973 and Suh, 2003). This means that w becomes zero and the dimension of Z is augmented accordingly. Similarly, the system can be closed toward the outputs, y and r by treating the recipients of the materials or energy as part of the ecosystem compartments.

The left-hand side (LHS) and right-hand side (RHS) of equation (17) refer to the total production by the component on the basis of the input balance and output balance, respectively. In matrix notation, these relationships are written as

(18) $$\mathbf{i}'\mathbf{Z} + \mathbf{i}'\mathbf{W} = \mathbf{x}'$$

and

(19) $$\mathbf{Z}\mathbf{i} + \mathbf{v} = \mathbf{x},$$

respectively, where $\mathbf{v} = \mathbf{s} + \mathbf{y} + \mathbf{r}$, $\mathbf{x}$ is the total production, and $\mathbf{i}$ is a summation operator, a column vector in the relevant dimension with 1s for all elements.[7] Let $\mathbf{Z} = \hat{\mathbf{x}}\overline{\mathbf{A}} = \mathbf{A}\hat{\mathbf{x}}$, where $\hat{\mathbf{x}}$ refers to a diagonalized matrix of vector $\mathbf{x}$. An element in $\overline{\mathbf{A}}$, $\overline{a}_{ij}$ shows the fraction of i directly distributed to j, whereas a_{ij} shows the amount of i directly required to produce one unit of j. Then (18) and (19) become

(20) $$\mathbf{x}'\overline{\mathbf{A}} + \mathbf{i}'\mathbf{W} = \mathbf{x}'$$

and

(21) $$\mathbf{A}\mathbf{x} + \mathbf{v} = \mathbf{x},$$

respectively. Rearranging (20) and (21) yields

(22) $$\mathbf{x}' = \mathbf{i}'\mathbf{W}(\mathbf{I} - \overline{\mathbf{A}})^{-1}$$

and

[7] Using $\dot{\mathbf{v}} = [\mathbf{s} \;\; \mathbf{y} \;\; \mathbf{r}]$ allows the three components of the total net system output to be distinguished as well.

(23) $$\mathbf{x} = (\mathbf{I} - \mathbf{A})^{-1}\mathbf{v},$$

respectively. The input-side balance in (18), (20), and (22) is a physical version of the *supply-driven* model by Ghosh, while the output-side balance in (19), (21), and (23) is the *demand-driven* model by Leontief (Ghosh, 1958; Leontief, 1941). In particular, the *i–j*th element of $(\mathbf{I} - \overline{\mathbf{A}})^{-1}$ shows the amount of *j* produced relying on the input from *i*, while that of $(\mathbf{I} - \mathbf{A})^{-1}$ shows the amount of *i* required to produce one unit of net system output *j*. Under the assumption that the input-output structure of the materials and energy flow is fixed, one can calculate the total direct and indirect production of ecosystem components for an arbitrary primary input or net system output using equations (22) and (23).

Let $\mathbf{B} = \mathbf{W}\hat{\mathbf{x}}^{-1}$ and $\mathbf{C} = \hat{\mathbf{x}}^{-1}\hat{\mathbf{v}}$, denoting the normalized primary input matrix and the normalized net system output vector, respectively.[8] The equation

(24) $$\mathbf{v}' = \mathbf{i}'\mathbf{W}(\mathbf{I} - \overline{\mathbf{A}})^{-1}\mathbf{C}$$

may then be used to calculate the amount of net system output enabled by the primary input. Similarly, the equation

(25) $$\mathbf{W}\mathbf{i} = \mathbf{B}(\mathbf{I} - \mathbf{A})^{-1}\mathbf{v}$$

calculates the primary inputs required for the net system output. It should also be noted that the supply-driven model by Ghosh has been interpreted as an *allocative* model. This line of interpretation of the supply-driven model is discussed in the next section.

4. Interrelations between existing MEFA approaches

In this section, the interrelations between existing MEFA approaches are derived by means of the generalized MEFA framework presented in the previous section.

4.1. A system closed toward primary inputs

[8] A diagonalized form of the relevant vector is more useful for understanding the internal structure than the sum. For instance, if $\hat{\mathbf{B}}_k = \hat{\mathbf{W}}_k\hat{\mathbf{x}}^{-1}$, $\hat{\mathbf{v}}$, and $\hat{\mathbf{W}}_k$ are used instead of $\mathbf{B}$, $\mathbf{v}$, and $\mathbf{i}'\mathbf{W}$, respectively, the results of equations (22) to (25) show the same information but are distributed over the ecosystem components and the type of primary input, *k*.

The relationship between the matrix symbols in earlier studies and the generalized MEFA framework is summarized in Table 2. Using Table 2, equation (4), which is used in Hannon (1973), can be converted into

$$\begin{bmatrix} \mathbf{x} \\ \mathbf{Wi} \end{bmatrix} = \begin{bmatrix} \mathbf{I}-\mathbf{A} & \mathbf{0} \\ -\mathbf{B} & \mathbf{I} \end{bmatrix}^{-1} \begin{bmatrix} \mathbf{v} \\ \mathbf{0} \end{bmatrix}. \tag{26}$$

With the help of LU decomposition, the inverse of the concatenated matrices in equation (26) can be shown to be

$$\begin{bmatrix} \mathbf{x} \\ \mathbf{Wi} \end{bmatrix} = \begin{bmatrix} (\mathbf{I}-\mathbf{A})^{-1} & \mathbf{0} \\ \mathbf{B}(\mathbf{I}-\mathbf{A})^{-1} & \mathbf{I} \end{bmatrix} \begin{bmatrix} \mathbf{v} \\ \mathbf{0} \end{bmatrix}, \tag{27}$$

so that the overall operation becomes equivalent to

$$\begin{bmatrix} \mathbf{x} \\ \mathbf{Wi} \end{bmatrix} = \begin{bmatrix} (\mathbf{I}-\mathbf{A})^{-1}\mathbf{v} \\ \mathbf{B}(\mathbf{I}-\mathbf{A})^{-1}\mathbf{v} \end{bmatrix}. \tag{28}$$

Observe the identity between the submatrices in equation (28) and equations (23) and (25) of the generalized MEFA framework. Thus, the calculus used by Hannon (1973) is a special case of the generalized MEFA framework. From this general relationship, it can also be observed that endogenizing the primary input does not alter the general results (see also Suh, 2003).

4.2. Transitive closure matrices

Using Table 2, equation (7) can be rewritten using the notation of generalized MEFA framework as

$$\mathbf{Q}^{*} = \begin{bmatrix} \mathbf{0} & \mathbf{0} & \mathbf{0} \\ \hat{\mathbf{D}} & \mathbf{A}' & \mathbf{0} \\ \mathbf{0} & \mathbf{I} & \mathbf{0} \\ \mathbf{0} & \mathbf{I} & \mathbf{0} \end{bmatrix}. \tag{29}$$

Using LU decomposition, the block matrices in the Transitive Closure Inflow matrix, $\mathbf{N}^{*} = (\mathbf{I}-\mathbf{Q}^{*})^{-1}$, can be broken down into

Table 2. Relationships between symbols for basic matrices in MEFA studies*

Previous symbols	Symbols in this paper	Meaning	Reference for the previous study
$\mathbf{G}$	$\begin{bmatrix} \mathbf{A} & \mathbf{0} \\ \mathbf{B} & \mathbf{0} \end{bmatrix}$	Structural coefficient for the system that is closed toward primary inputs.	Hannon (1973)
$\mathbf{e}$	$\begin{bmatrix} \mathbf{x} \\ \mathbf{Wi} \end{bmatrix}$	Total production for the system that is closed toward primary inputs.	Hannon (1973)
$\mathbf{P}_{21}$	$\hat{\mathbf{w}}$	Diagonalized primary input.	Finn (1976, 1977)
$\mathbf{P}_{22}$	$\mathbf{Z}'$	Materials or energy flows between ecosystem components.	Finn (1976, 1977)
$\mathbf{P}_{32}$	$\begin{bmatrix} \hat{\mathbf{y}} \\ \hat{\mathbf{s}} \end{bmatrix}$	Diagonalized net system output vector.	Finn (1976, 1977)
$\mathbf{Q}^{*}_{21}$	$\hat{\mathbf{B}}$	Diagonalized primary input coefficient vector.	Finn (1976, 1977)
$\mathbf{Q}^{*}_{22}$	$\mathbf{A}'$	Transposed structural coefficient matrix.	Finn (1976, 1977)
$\mathbf{Q}^{*}_{32}$	$\begin{bmatrix} \mathbf{I} \\ \mathbf{I} \end{bmatrix}$	Identity matrices.	Finn (1976, 1977)
$\mathbf{Q}^{**}_{21}$	$\mathbf{I}$	An identity matrix.	Finn (1976, 1977)
$\mathbf{Q}^{**}_{22}$	$\overline{\mathbf{A}}'$	Transposed Ghosh structural coefficient matrix.	Finn (1976, 1977)
$\mathbf{Q}^{**}_{32}$	$\begin{bmatrix} \hat{\mathbf{y}}\hat{\mathbf{x}}^{-1} \\ \hat{\mathbf{s}}\hat{\mathbf{x}}^{-1} \end{bmatrix}$	Normalized net system output and changes in stock size.	Finn (1976, 1977)

* Other symbols are either defined in the text or can be used directly without loss of consistency.

(30)
$$\mathbf{N}^{*} = \begin{bmatrix} \mathbf{I} & \mathbf{0} & \mathbf{0} & \mathbf{0} \\ (\mathbf{I}-\mathbf{A}')^{-1}\hat{\mathbf{B}} & (\mathbf{I}-\mathbf{A}')^{-1} & \mathbf{0} & \mathbf{0} \\ (\mathbf{I}-\mathbf{A}')^{-1}\hat{\mathbf{B}} & (\mathbf{I}-\mathbf{A}')^{-1} & \mathbf{I} & \mathbf{0} \\ (\mathbf{I}-\mathbf{A}')^{-1}\hat{\mathbf{B}} & (\mathbf{I}-\mathbf{A}')^{-1} & \mathbf{0} & \mathbf{I} \end{bmatrix}.$$

Apparently, matrix $\mathbf{N}^{*}$ does not need all of its space, as only two submatrices are meaningful in terms of information contents. Transposing the block elements in the matrix gives $(\mathbf{N}^{*}_{21})' = \hat{\mathbf{B}}(\mathbf{I}-\mathbf{A})^{-1}$ and $(\mathbf{N}^{*}_{22})' = (\mathbf{I}-\mathbf{A})^{-1}$, which are identical to the key elements in (23) and (25) of the generalized MEFA framework.

Now consider the Transitive Closure Outflow matrix, $\mathbf{N}^{**} = (\mathbf{I}-\mathbf{Q}^{**})^{-1}$, where

(31)
$$\mathbf{Q}^{**} = \begin{bmatrix} \mathbf{0} & \mathbf{0} & \mathbf{0} \\ \mathbf{I} & \overline{\mathbf{A}}' & \mathbf{0} \\ \mathbf{0} & \hat{\mathbf{x}}^{-1}\hat{\mathbf{y}} & \mathbf{0} \\ \mathbf{0} & \hat{\mathbf{x}}^{-1}\hat{\mathbf{s}} & \mathbf{0} \end{bmatrix}.$$

Using the similar procedure it can easily be shown that

(32)
$$\mathbf{N}^{**} = \begin{bmatrix} \mathbf{I} & \mathbf{0} & \mathbf{0} & \mathbf{0} \\ (\mathbf{I}-\overline{\mathbf{A}}')^{-1} & (\mathbf{I}-\overline{\mathbf{A}}')^{-1} & \mathbf{0} & \mathbf{0} \\ \hat{\mathbf{x}}^{-1}\hat{\mathbf{y}}(\mathbf{I}-\overline{\mathbf{A}}')^{-1} & \hat{\mathbf{x}}^{-1}\hat{\mathbf{y}}(\mathbf{I}-\overline{\mathbf{A}}')^{-1} & \mathbf{I} & \mathbf{0} \\ \hat{\mathbf{x}}^{-1}\hat{\mathbf{s}}(\mathbf{I}-\overline{\mathbf{A}}')^{-1} & \hat{\mathbf{x}}^{-1}\hat{\mathbf{s}}(\mathbf{I}-\overline{\mathbf{A}}')^{-1} & \mathbf{0} & \mathbf{I} \end{bmatrix}.$$

Transposing the block elements gives $(\mathbf{N}^{**}_{22})' = (\mathbf{I}-\overline{\mathbf{A}})^{-1}$, $(\mathbf{N}^{*}_{32})' = (\mathbf{I}-\overline{\mathbf{A}})^{-1}\hat{\mathbf{y}}\hat{\mathbf{x}}^{-1}$, and $(\mathbf{N}^{*}_{42})' = (\mathbf{I}-\overline{\mathbf{A}})^{-1}\hat{\mathbf{s}}\hat{\mathbf{x}}^{-1}$, which are again identical to the key elements in (22) and (24) of the generalized MEFA framework. The interpretation by Patten et al. (1976) of an element $(\mathbf{N}^{**}_{22})_{ij}$, which is the amount of *i* produced by a unit flow originating from *j*, is generally in line with the interpretation in the generalized MEFA framework as well.

Overall, it is shown that the calculus used by Finn (1976, 1977) is also a special case of the generalized MEFA framework.

4.3. Distribution of primary inputs over ecosystem components

The previous section has shown the genon flow analysis to be equivalent to the supply-driven model by Ghosh, and has confirmed that the interpretation by Patten et al. (1976) of genon flow is equivalent to that of Ghosh. In the present section I elaborate on the proposition by Hannon (1973) on the distribution of primary inputs and its relationship with the approaches taken by others.

Using Table 2, equation (5) used for the calculation of primary energy distribution can be rewritten as

$$\mathbf{\Pi} = \mathbf{B}(\mathbf{I} - \mathbf{A})^{-1}\hat{\mathbf{x}}, \tag{33}$$

The formula does not resemble any of those discussed so far. Recall that Finn's genon flow analysis is also described as a model for the distribution of inputs, although the interpretation by Patten et al. (1976) was not. Perhaps it may be helpful to compare Finn's genon flow model with Hannon's proposition. The total flows in the genon flow analysis by Finn (1976, 1977) can be calculated by

$$\mathbf{W}(\mathbf{N}_{22}^{**})' = \mathbf{W}(\mathbf{I} - \overline{\mathbf{A}})^{-1}, \tag{34}$$

the RHS of which is completely different from that of equation (33). Although they do not appear to be, equations (33) and (34) are identical (see the Appendix B for a proof). Thus, the seemingly quite different approach used by Hannon (1973) to calculate the distribution of primary inputs over ecosystem components is in fact identical to that used in Finn's genon flow analysis. Then it turned out that the apparently different interpretations by Patten et al. (1976) and Hannon (1973) have been made on the same equation. Recall that the interpretation by Patten et al. (1976) of equation (34) is that it gives the amount of ecosystem components produced by the amount of primary inputs, while the interpretation by Hannon (1973) of (33) is that it concerns the distribution of primary inputs over ecosystem components. Which interpretation is right?

It can be easily shown, using an example, that the calculus used in (33) and (34) is not about the distribution of inputs in the general sense of the term "distribution". Let us examine the simple and aggregated system shown in Figure 3. Equation (33) or (34) results in

$$\mathbf{\Pi} = \begin{bmatrix} 147 & 96 \\ 63 & 64 \end{bmatrix} \tag{35}$$

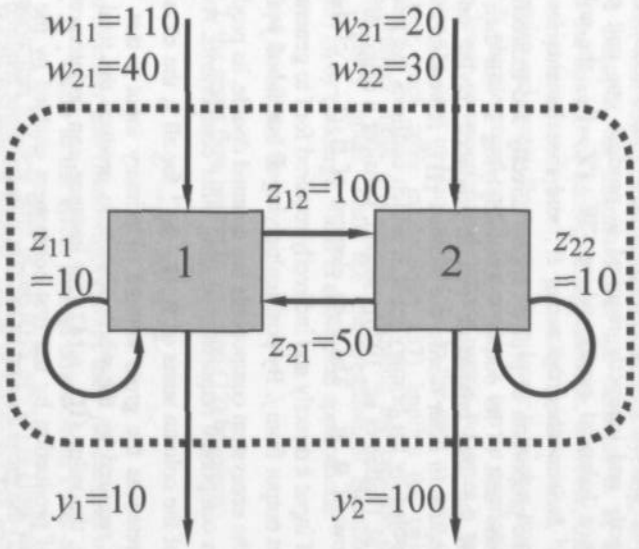

Figure 3. An example of a two-component system

According to Hannon (1973) this means that 147 and 96 units of the first primary input are distributed over the first and the second components, respectively, and 63 and 64 of the second primary inputs over the first and second components, respectively. However, the total system inputs of the first and second primary inputs amount to only 150 and 50 units, respectively. This disqualifies the interpretation of $\mathbf{\Pi}$ as the mere distribution of inputs, since what has been distributed is more than what is supplied.

Here I analyze the meaning of $\mathbf{\Pi}$ by means of its components. First, the operation $\mathbf{B}(\mathbf{I}-\mathbf{A})^{-1}$ results in a matrix (or a row vector, depending on the dimension of $\mathbf{B}$), one of whose elements shows the amount of each primary input directly and indirectly required to produce one unit of net system output. In a balanced system where $\mathbf{i}'\mathbf{W}+\mathbf{i}'\mathbf{Z}=\mathbf{i}'\mathbf{x}$, the column sum of $\mathbf{B}(\mathbf{I}-\mathbf{A})^{-1}$ is invariably the vector $\mathbf{i}'$, and the elements in each column indicate the proportion of primary inputs directly and indirectly required to produce one unit of its output. Post-multiplying $\hat{\mathbf{x}}$ will then result in the amount of the total production that is produced relying on each of the primary inputs. In other words, the element $(\mathbf{\Pi})_{ki}$ represents the amount of i that is enabled by the primary input k, which confirms the interpretation by Patten et al. (Patten et al., 1976). Second, consider a diagonalized vector of the kth row of $\mathbf{B}$, $\hat{\mathbf{B}}_k$. The i–jth element of $\hat{\mathbf{B}}_k(\mathbf{I}-\mathbf{A})^{-1}$ then shows the amount of input k directly and indirectly required for i to generate one unit of system net output from j. By post-multiplying $\hat{\mathbf{x}}$ instead of $\hat{\mathbf{y}}$, the exchanges between the ecosystem components are counted double, as production of one ecosystem component requires producing other components. As $\mathbf{B}(\mathbf{I}-\mathbf{A})^{-1}\hat{\mathbf{x}}$ consists of the column sums of $\hat{\mathbf{B}}_k(\mathbf{I}-\mathbf{A})^{-1}$ for all k, the element $(\mathbf{\Pi})_{ki}$ can be interpreted as the gross amount of primary input k that is directly or indirectly required by the whole system to produce the total amount of i. Therefore, the value $(\mathbf{\Pi})_{11}=147$, for instance, can be interpreted as (1) the amount of production by the first component enabled by the first primary input or (2) the gross amount of the first primary input required by the whole system to produce the total amount of the first component, which are, in any case, not about distribution of primary inputs.

Does this mean that the interpretation of (34) by Hannon (1973) is misleading? Below, I argue that it is not. It is well known that the inverse matrix in (33) and (34) can be expanded into a power series form. Using the identity $\mathbf{A}\hat{\mathbf{x}}=\hat{\mathbf{x}}\overline{\mathbf{A}}$ and the power series, equations (33) and (34) can be written as

(36) $$\mathbf{\Pi} = \mathbf{B}\hat{\mathbf{x}}(\mathbf{I} + \overline{\mathbf{A}} + \overline{\mathbf{A}}^2 + \overline{\mathbf{A}}^3 + \cdots),$$

which becomes

(37) $$\mathbf{\Pi} = \mathbf{W} + \mathbf{BZ} + \mathbf{BZ}\overline{\mathbf{A}} + \mathbf{BZ}\overline{\mathbf{A}}^2 + \mathbf{BZ}\overline{\mathbf{A}}^3 + \cdots.$$

The first term already shows the total primary input to the system. The second, a fraction of the first, shows the total primary inputs required for the whole intra-system exchanges. The third, a fraction of the second, shows the amount of the first tier distribution of the primary inputs, and so on. Thus, the values in $\mathbf{\Pi}$ are accumulative amounts of primary inputs, which means that in a system with strong direct or indirect internal cycling, as is the case in the above example, the magnitudes of the elements in $\mathbf{\Pi}$ are grossly amplified. In the context of ecological applications, however, the predator-prey relationship in an ecosystem is generally unidirectional, that is, the direction of mass and energy flows goes from lower to higher trophic levels. In other words, the structural coefficient matrix $\mathbf{A}$ can be arranged in such a way that the lower or upper triangle of the matrix becomes a zero matrix, which was also the case in Hannon (1973). In the case of zero or minimal internal cycling, each term in equation (37) implies the unidirectional sequence of primary input distribution, showing the cascade distribution structure of primary inputs. Thus, the interpretation of equation (33) by Hannon (1973) is, by and large, valid in ecological applications.

4.4. Gross flow and Total flow

Using Table 2, the gross flow matrix in equation (12) becomes

(38) $$\mathbf{Z}^{\mathrm{G}} = (\mathbf{I} - \mathbf{A})^{-1}\hat{\mathbf{x}} - \hat{\mathbf{x}}.$$

According to Szyrmer and Ulanowicz (1987) , the *i–j*th element of the gross flow matrix, z_{ij}^{G}, refers to the effect that an output from *i* has on the total output *j*. Observe that the first term in the RHS of (38) is close to Hannon's proposal for the distribution of primary inputs in equation (33), except for the normalized primary input coefficient **B**. Applying the power series expansion to (36) and (37), $\mathbf{Z}^{\mathrm{G}}$ is expanded to

(39) $$\mathbf{Z}^{\mathrm{G}} = \mathbf{Z} + \mathbf{Z}\overline{\mathbf{A}} + \mathbf{Z}\overline{\mathbf{A}}^2 + \mathbf{Z}\overline{\mathbf{A}}^3 + \cdots,$$

showing the cascade distribution of ecosystem components outputs through intra-system exchanges. Again, the values are in accumulative form and thus require cautious interpretation when added up. In the words of Patten et al.

(1976), z_{ij}^{G} may be interpreted as the accumulated production of j enabled by the output from i, which is generally in line with the definition by Szyrmer and Ulanowicz (1987).

Szyrmer and Ulanowicz (1987) argued that the total flows are more closely related to the network properties. Equation (13), used for the calculation of total flows by Szyrmer and Ulanowicz (1987), can be rewritten as

$$\mathbf{Z}^{T} = (\mathbf{D} - \mathbf{I})\hat{\mathbf{x}}(\hat{\mathbf{D}}^{d})^{-1}, \tag{40}$$

where $\mathbf{D} = (\mathbf{I} - \mathbf{A})^{-1}$ and $\mathbf{D}^{d}$ is a vector with the diagonal elements of $\mathbf{D}$.[9] Using $\mathbf{Z}^{G}$ in equation (38), equation (40) can be rewritten as

$$\mathbf{Z}^{T} = \mathbf{Z}^{G}(\hat{\mathbf{D}}^{d})^{-1}, \tag{41}$$

so that the total flow matrix is simply a scaled-down version of the gross flow matrix based on the degree of self-cycling that appears in the diagonal of $\mathbf{D}$. In general, one can regard the total flow as a version of the gross flow $\mathbf{Z}^{G}$, with the amplification effects due to self-cycling removed.[10]

4.5. Environ analysis

The calculus of environ analysis is very similar to the Structural Path Analysis (SPA) proposed in economics by Defourny and Thorbecke (Defourny and Thorbecke, 1984). SPA was proposed as a tool to analyze the paths in the circulation of monetary flows in an economy through consumption, production and income distribution. This has been further extended to describe energy or other physical flows (see eg. (Suh, 2002; Treloar, 1997)).

Using Table 2 and section 4.2 of the present paper, the input environ between ecosystem components induced by one unit of net system output of i is calculated in the generalized MEFA framework as

---

[9] In Szyrmer and Ulanowicz (1987), another total flow matrix appears, for which the authors refer to Augustinovics (1970) as its methodological reference. Although Szyrmer and Ulanowicz (1987) did not explicitly show it, one may deduce from a table that the authors used $(\hat{\mathbf{D}}^{d})^{-1}\mathbf{Z}^{G}$ for its calculation. The equivelence of this operation with that in (Augustinovics, 1970), which is basically about Ghosh's supply-driven model, however, is not confirmed.

[10] Accordingly, the total intermediate output matrix, $\hat{\mathbf{x}}^{-1}\mathbf{Z}^{T}$ in Szyrmer and Ulanowicz (1987) can be reduced to $[(\mathbf{I} - \overline{\mathbf{A}})^{-1} - \mathbf{I}](\hat{\mathbf{D}}^{d})^{-1}$, the i–jth element of which shows the net fraction of i distributed over j.

(41) $$\mathbf{E}^{\Lambda,i} = \mathbf{A}\hat{\mathbf{D}}_i.$$

Input environs from the primary input k due to a unit of net system output of i can be found from the ith column of $\hat{\mathbf{B}}_k(\mathbf{I}-\mathbf{A})^{-1}$, that was already appeared in section 3. Calculation of the output Environ due to one unit of primary input to i between the ecosystem components is done by

(42) $$\mathbf{E}^{\Omega,i} = \hat{\overline{\mathbf{D}}}_i\overline{\mathbf{A}},$$

where $\hat{\overline{\mathbf{D}}}_i$ is the diagonalized vector of the ith row in $(\mathbf{I}-\overline{\mathbf{A}})^{-1}$. The output environs to net system output and changes in stock can be found from the ith rows of $(\mathbf{I}-\overline{\mathbf{A}})^{-1}\hat{\mathbf{y}}\hat{\mathbf{x}}^{-1}$ and $(\mathbf{I}-\overline{\mathbf{A}})^{-1}\hat{\mathbf{s}}\hat{\mathbf{x}}^{-1}$, respectively, that were appeared in section 3 as well.

In general, each of the intra-system output Environs from i to j due to the system net output m can be derived using the simple scalar notation

(43) $$e_{ij}^{\Lambda,m} = a_{ij}d_{jm}.$$

Similarly, each of the intra-system input environs from i to j due to the primary input k is calculated by

(44) $$e_{ij}^{\Omega,k} = \overline{d}_{ki}\overline{a}_{ij},$$

where $\overline{d}_{ki}$ is k–ith element of $\overline{\mathbf{D}} = (\mathbf{I}-\overline{\mathbf{A}})^{-1}$ (see the example in the next section).

Overall, environ analysis is successfully translated into the generalized MEFA framework, and it is shown that the framework is able to perform the analysis in more compact manner.

5. A Numerical Example

Table 3 and Figure 4 show an example of a MEFA problem involving five ecosystem components and two types of primary input. Two types of dependency coefficients can be defined: supply-driven dependency and demand-driven dependency. Supply-driven dependency is calculated from equation (22) by $(\mathbf{I}-\overline{\mathbf{A}})^{-1}-\mathbf{I}$ (Table 4), while demand-driven dependency is derived from (23) by $(\mathbf{I}-\mathbf{A})^{-1}-\mathbf{I}$ (Table 5).

Table 3. Input data for the numerical example (kCal/m^2-year)*

	(1)	(2)	(3)	(4)	(5)	Exports (y)	Respiration (r)	Changes in stock (s)	Total Production (x)
(1) Plants	0	0	0	0	8881	300	2003	-200	10984
(2) Bacteria	0	0	75	0	1600	255	3275	0	5205
(3) Detritus feeders	0	0	0	370	200	0	1814	0	2384
(4) Omnivores	0	0	0	0	167	0	203	500	870
(5) Detritus	0	5205	2309	0	0	860	3109	0	11483
Primary input of bread (w_1)	0	0		500	0				
Primary input of sunlight (w_2)	10984	0	0	0	635				
Total Production (x')	10984	5205	2384	870	11483				

* Modified from EcoNetwrk database on Cone Spring (http://www.glerl.noaa.gov/EcoNetwrk/EcoNetwrk.html).

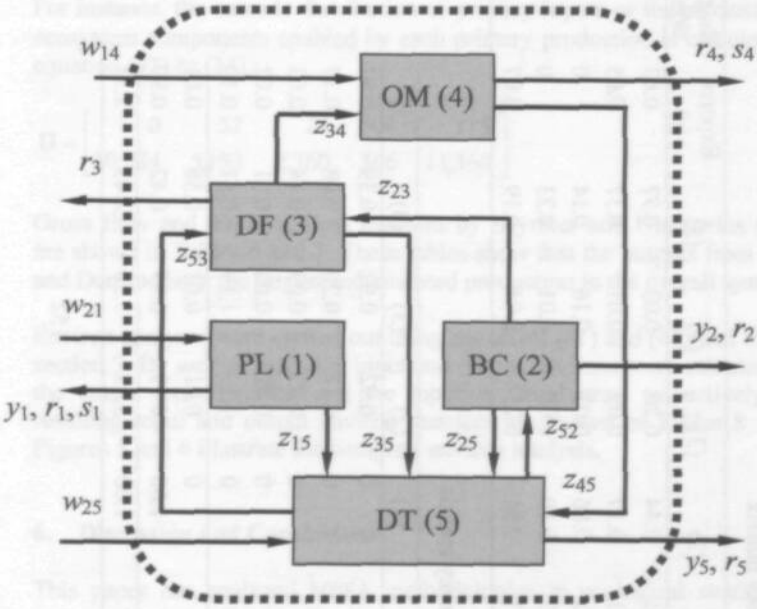

Figure 4. An example of a MEFA problem
Arrows show direct interactions. PL: Plants; BC: Bacteria; DF: Detritus feeders; OM: Omnivores; DT: Detritus.

Table 4. Supply-driven dependency matrix

	(1)	(2)	(3)	(4)	(5)	Exports (y)	Respiration (r)	Changes in stock (s)	Sum
(1) Plants	0	0.44	0.20	0.03	0.97	0.03	0.18	-0.02	1.83
(2) Bacteria	0	0.17	0.09	0.01	0.37	0.05	0.63	0	1.32
(3) Detritus feeders	0	0.06	0.03	0.16	0.14	0	0.76	0	1.15
(4) Omnivores	0	0.10	0.05	0.01	0.23	0	0.23	0.57	1.20
(5) Detritus	0	0.54	0.25	0.04	0.19	0.07	0.27	0	1.37

Table 5. Demand-driven dependency matrix

	(1)	(2)	(3)	(4)	(5)
(1) Plants	0	0.92	0.92	0.39	0.92
(2) Bacteria	0	0.17	0.20	0.08	0.17
(3) Detritus feeders	0	0.03	0.03	0.44	0.03
(4) Omnivores	0	0.02	0.02	0.01	0.02
(5) Detritus	0	1.19	1.19	0.51	0.19
Primary input of bread (w_1)	0	0.01	0.01	0.58	0.01
Primary input of sunlight (w_2)	1.00	0.99	0.99	0.42	0.99
Sum	1.00	3.33	3.36	2.43	2.33

The i–jth cell in Table 4 shows the production of j induced by one unit of availability of i, and the i–jth cell in Table 5 shows the net amount of i required to produce one unit of j. The negative element in Table 4 shows that one unit of availability of Plants actually reduces the stock size of plants because the availability of Plants partly depends on its stock. Finn's Cycling Index appears in the diagonal of the two tables. The sum in Table 4 shows that unit increase in the availability of Plants increases the overall production in the system the most. In terms of gross input requirements, Detritus Feeders require the largest direct and indirect energy inputs to produce one unit of themselves. By multiplying the total primary inputs and total net system output one can easily calculate the actual amount instead of the coefficients. For instance, the cascade distribution of primary inputs or the production of ecosystem components enabled by each primary production is calculated by equation (33) or (34).

$$\mathbf{\Pi} = \begin{bmatrix} 0 & 52 & 24 & 504 & 115 \\ 10{,}984 & 5{,}153 & 2{,}360 & 366 & 11{,}368 \end{bmatrix}$$

Gross flow and the total flow matrices by Szyrmer and Ulanowicz (1987) are shown in Tables 6 and 7. These tables show that the outputs from Plants and Detritus have the largest accumulated production in the overall system.

Environ analyses were carried out using equations (41) and (42) and those in section 3. By way of example, input and output environs were calculated for the output from Detritus and the input to Omnivores, respectively. The resulting input and output environ matrices are shown in Tables 8 and 9. Figures 5 and 6 illustrate the complete environ analysis.

6. Discussion and Conclusions

This paper has analyzed MEFA methodologies in ecological studies, and presented a generalized MEFA framework that embraces ecological as well as economic systems. Using the generalized MEFA framework, it has interpreted and compared existing methods, while discussing a few critical issues of interpretations and calculi as well. Finally, it has demonstrated the generalized MEFA framework by means of a numerical example. Below I discuss a few issues arising from the analyses.

Possibilities and limitations of linear frameworks

The MEFA framework presented here is basically, like economic input-output analysis, a system of linear equations, and is certainly not a one-size-fits-all tool. There are important limitations, which clearly restrict application of the analysis. Most of all, caution needs to be exerted when the results of MEFA

Table 6. Gross flow matrix, Z^G

	(1)	(2)	(3)	(4)	(5)	Sum
(1) Plants	0	4,809	2,203	342	10,610	17,964
(2) Bacteria	0	871	474	74	1,922	3,341
(3) Detritus feeders	0	147	67	380	324	918
(4) Omnivores	0	90	41	6	200	337
(5) Detritus	0	6,218	2,848	442	2,235	11,743

Table 7. Total flow matrix, Z^T

	(1)	(2)	(3)	(4)	(5)	Sum
(1) Plants	0	4,120	2,142	339	8,881	15,482
(2) Bacteria	0	746	461	73	1,609	2,889
(3) Detritus feeders	0	126	65	378	271	840
(4) Omnivores	0	78	40	6	167	291
(5) Detritus	0	5,327	2,770	439	1,871	10,407

Table 8. Input environs matrix, $E^{A,5}$

	(1)	(2)	(3)	(4)	(5)	Export (y)
(1) Plants	0	0	0	0	0.924	0
(2) Bacteria	0	0	0.001	0	0.167	0
(3) Detritus feeders	0	0	0	0.007	0.021	0
(4) Omnivores	0	0	0	0	0.017	0
(5) Detritus	0	0.167	0.027	0	0	1

Table 9. Output Environ matrix, $E^{\Omega,1}$

	(1)	(2)	(3)	(4)	(5)
(1) Plants	0	0	0	0	0
(2) Bacteria	0	0	0.0015	0	0.032
(3) Detritus feeders	0	0	0	0.0074	0.004
(4) Omnivores	0	0	0	0	0.1934
(5) Detritus	0	0.1039	0.0461	0	0
Primary input of bread (w_1)	0	0	0	1	0

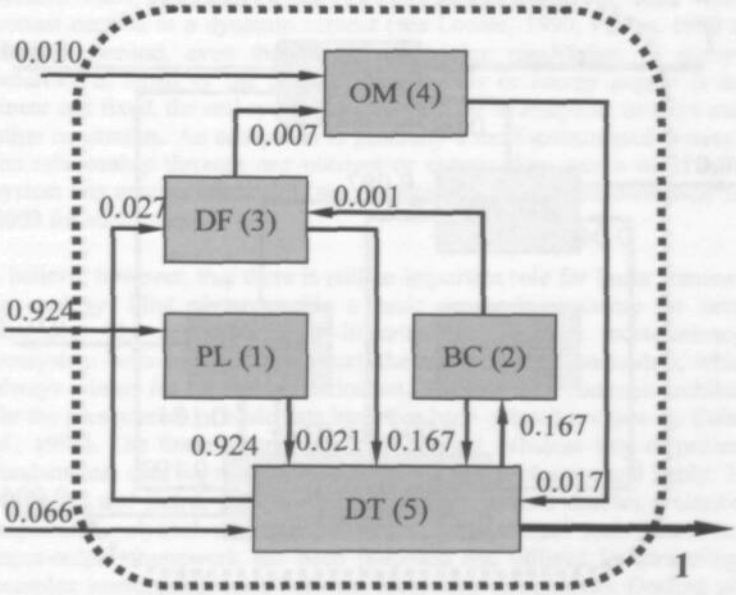

Figure 5. Input Environs per unit export of Detritus

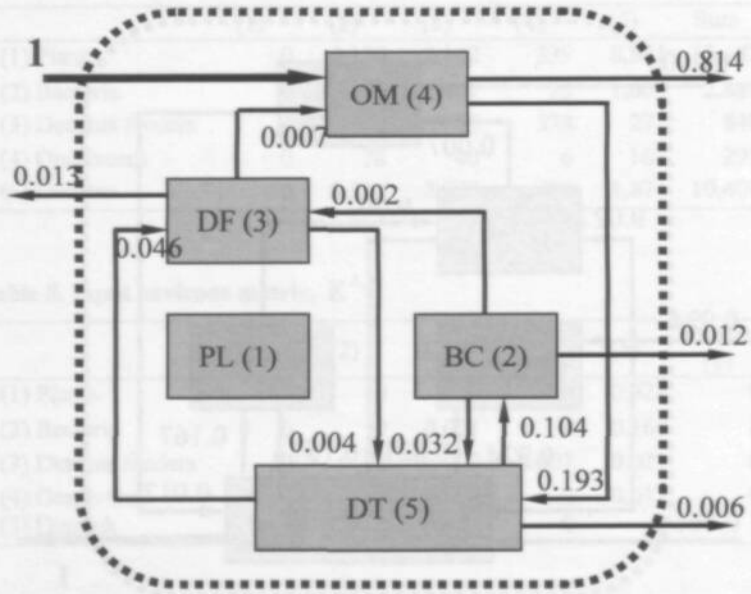

Figure 6. Output Environs per unit of primary input to Omnivores

are applied for the purpose of prediction. First, the framework assumes that the input-output relationship is linear and fixed. In reality, the relationship between the network components of an ecosystem is by no means linear or fixed. A predator-prey relationship in a food web, for instance, changes over time for a variety of reasons, including changes in patterns of competition, seasonal changes, and, most fundamentally, behavioral indeterminacy (Strogatz, 2001; Yodzis, 1988). Although the MEFA framework is perfectly correct as a snapshot of reality for certain period of time, it has a serious limitation as a predictive model, especially for a non-linear, indeterministic system. In other words, an analysis based on a linear MEFA framework is often irrelevant for *predicting* the behavior of such a system beyond the marginal perturbation, although it is perfectly relevant to *understanding* the system. Thus the terms "effect" or "influence" should be used with the utmost caution in a dynamic context (see Loehle, 1990; Patten, 1990 for a debate). Second, even though the underlying mechanism of ecosystem behavior in terms of the changes in materials or energy supply is nearly linear and fixed, the real system may not behave as analyzed, as there may be other constraints. An ecosystem is generally a multi-constrained system, and the relationship through one nutrient or energy flow works only until the system hits another constraint (see Gaedke et al., 2002; Sundareshwar et al., 2003 for such cases).

I believe, however, that there is still an important role for linear frameworks in ecology. First, they provide a basic accounting scheme for network structure. The complexity, non-linearity, and inherent indeterminacy of ecosystem behavior does not reduce the need for more basic data, which is always a basis for further sophistication. The lack of a common architecture for the presentation of basic data has often been pointed out (see eg. Cohen et al., 1993). The linear system is a well-defined, efficient way of presenting fundamental data for a network structure (e.g. Christensen and Pauly, 1992; Heymans and Baird, 2000b). Second, the framework enables a number of important analytical measures. A variety of analytical tools based on the input-output framework has been proposed and utilized in unraveling the complex interdependencies between ecosystem components. Dealing with a complex system often requires a set of indicators that reveal some key properties of the system. By virtue of its common structure, the linear framework provides a number of universal indicators that can be applied to different systems and enable better inter-system comparison.

Parallels and convergents in economics and ecology

Szyrmer and Ulanowicz (1987) raised the question whether the novel adaptations of input-output analysis made by ecologists were ever applied in economics. Having analyzed the MEFA approaches in ecology, I could find many "parallels and convergents" between the developments introduced by economists and ecologists. The name of A. Ghosh, who proposed the supply-

driven model in 1958, is almost completely unknown in ecological literature. But although the two disciplines are thus relatively isolated from each other, exactly the same problem formulation as that used by Ghosh (1958) appears from the very beginning of its introduction by Hannon (1973) and has been independently proposed by others in variety of forms, notably by Finn (1976, 1977), Patten et al., (1976) and Szyremer and Ulanowicz (1985). Another example may be the Structural Path Analysis (SPA) by Defourny and Thorbecke (1984), who introduced it to analyze monetary flows in an economic system. Although it is quite evident that the SPA method was developed independently from ecological literature, many of its elements can be found in the environ analysis. Thus, there are considerable overlaps between the relatively independent developments introduced by input-output economists and ecologists. Unfortunately, however, most of them fail to utilize the findings of others. Given that there are many interesting parallel developments of MEFA in ecology and input-output economics, a good communication between the two disciplines would be fruitful for both.

However, in exploring each other's disciplines, economists and ecologists need to be aware that there is a fundamental discrepancy between their views in addressing their systems, as is discussed in the next subsection.

Conflicts of paradigm between ecology and economics

One interesting observation of the present analysis is the contrast in specialization in MEFA approaches between ecology and input-output economics. Independent proposals of MEFA framework in ecology often reach Ghosh's supply-driven model, while the demand-driven model by Leontief has been the general practice in input-output economics (cf. Pauly and Christensen, 1995). Why has the supply-driven model been specialized as a MEFA framework in ecology? The answer may be helpful in revealing the fundamental difference between the views of the two disciplines in looking at their systems.

The supply-driven model and the demand-driven model are two facets of a network structure. The former shows the impact that the availability of inputs has upon production, while the latter shows the impact that the output has upon its production. In other words, the supply-driven model in ecology shows the change in production at higher trophic levels, or predators, that is induced by changes in availability at a lower trophic level, or prey, or the changes in overall activity rates induced by nutrient inflows. On the other hand, the demand-driven model in economics concerns with the impacts of consumer demand upon the production of commodities. In an ecosystem, however, quantifying the impacts of final demand on production is like asking the question, "how much phytoplankton will be produced due to the

increase in fish catches?", which is quite improbable.[11] The factor that governs the whole system in ecology is primary inputs from nature, showing the dependence of the ecological system on nature. The specialization of demand-driven model in economics implies the view that final consumption rather than the primary supply from nature is the driver that runs an economics system. In that sense, the demand-driven model is operated *as if* an economic system is free from the inputs from outside such as natural resources and solar energy.

Perhaps, the two conflicting paradigms have been able to coexist because our human ecology has not yet faced a major input-side constraint. The prices of major natural resources have been actually decreasing over the past decades, and there are views that technology development will ultimately lead to an invention of 'backstop technology', which will literally free the economic system from input-side constraints. Whether or not the depletion of resources will happen, or what does it imply for the intra- and inter-generation equity has long been a theoretical discussion in resources economics, and I do not have much to add to that (Dasgupta and Heal, 1974; Solow, 1974a; Solow, 1974b). However, interestingly, the recycling rates for major metal resources are steadily rising world wide, and there are substantial institutional changes towards a more recycling-oriented economy at least in Europe.[12] These movements would eventually change our economy more tied to resource availability through recycling, where supply-driven paradigm and findings in ecology will play an important role. In terms of the theory of ecosystem development by E. P. Odum, for instance, these developments toward an endogenized resources economy implies a step towards system maturity in the course of ecological succession (Odum, 1969). According to Odum (1969), ecological succession "culminates in a stabilized ecosystem in which maximum biomass (or high information content) and symbiotic function between organisms are maintained per unit of available energy flow". The implications of the theories and knowledge developed in ecology, including Odum's theory of ecosystem development, for an endogenized resources economy are yet to be explored.

A meeting point: Industrial Ecology and future research needs

There are some positive movements toward a more ecological paradigm in industry and economics, the rise of the new discipline of industrial ecology being one of them (Ayres and Ayres, 1996; Frosch and Gallopoulos, 1989;

---

[11] A slightly different question that is more relevant to a static relationship than to impacts in a dynamic sense would be "how much phytoplankton is required due to the increase in fish catches?", which is perhaps a more plausible question (see also Pauly and Christensen, 1995).

[12] Two very important steps in this development would be the European Union guidelines on Waste Electrical and Electronic Equipment (WEEE) and End of Life Vehicle (ELV). These guidelines set the required rate of recycling for electronic equipment and motor vehicles.

Graedel and Allenby, 1995). In industrial ecology, closing the materials cycle within the economy by means of symbiotic functions between industrial processes is among the greatest interests. This will be an important direction for future research on utilizing the findings of ecology to achieve a sustainable society. Interesting developments in industrial ecology include the Physical Input-Output Tables (PIOTs) and Substance Flow Analysis (SFA) projects. Over the last decade, national bureaus that collect economic statistics have started to compile PIOTs. PIOTs show the materials and energy terms of our economy, linking production, consumption, and disposal of products and services with their embedding physical reality (Kratena et al., 1992; Kratterl and Kratena, 1990; Pedersen, 1999; Stahmer et al., 2003). Large-scale Substance Flow Analysis (SFA) studies have recently been finished or are currently underway in a number of countries (Graedel and et al., 2003; Kyzia, 2003; Lennox et al., 2003; Spatari and et.al., 2003; van der Voet et al., 2000). These initiatives will broaden our current understanding on materials and energy cycles in our economy and environment and the findings in MEFA in ecology will be valuable resources.

Acknowledgement
The author is thankful to R.E. Ulanowicz, B. Hannon, and B.C. Patten for their comments and suggestions. The author is indebted to G. Huppes, E. Diezenbacher, and J. Klerkx for the kind reviews and advice on an earlier version of this paper and to E. de Roos for getting the literatures. The research is conducted partly by the financial support from AT&T Industrial Ecology fellowship program.

Appendix A

The accounting framework in Finn (1977).

	w_{11}	$\cdots$	$\cdots$	w_{1n}	$-\dot{x}_{1-}$	$\cdots$	$\cdots$	$-\dot{x}_{n-}$	$z_{.1}$	$\cdots$	$\cdots$	$z_{.n}$	$y_1 \cdots y_n$ $\dot{x}_{1+} \cdots \dot{x}_{n+}$
w_{11}													
$\vdots$													
w_{1n}													
$-\dot{x}_{1-}$													
$\vdots$													
$-\dot{x}_{n-}$													
$z_{1.}$	w_{11}	0	$\cdots$	0	$-\dot{x}_{1-}$	0	$\cdots$	0	f_{11}	f_{12}	$\cdots$	f_{1n}	
$z_{2.}$	0	w_{12}		0	0	$-\dot{x}_{2-}$		0	f_{21}	f_{22}		f_{2n}	
$\vdots$	$\vdots$		$\ddots$	$\vdots$	$\vdots$		$\ddots$	$\vdots$	$\vdots$		$\ddots$	$\vdots$	
$z_{n.}$	0	0	$\cdots$	w_{1n}	0	0	$\cdots$	$-\dot{x}_{n-}$	f_{n1}	f_{n2}	$\cdots$	f_{nn}	
y_1									y_1	0	$\cdots$	0	
$\vdots$									0	y_2		0	
$\vdots$									$\vdots$		$\ddots$	$\vdots$	
y_n									0	0	$\cdots$	y_n	
$\dot{x}_{1+}$									$\dot{x}_{1+}$	0	$\cdots$	0	
$\vdots$									0	$\dot{x}_{2+}$		0	
$\vdots$									$\vdots$		$\ddots$	$\vdots$	
$\dot{x}_{n+}$									0	0	$\cdots$	$\dot{x}_{n+}$	

In Finn (1977), the row index refers to the recipient and the column index to the supplier. w: primary input, $\dot{x}_{-}$: decrease in stock, z: intra-system exchanges, y: net system output, $\dot{x}_{+}$: increase in stock. Blank areas are zero cells (notations have been modified to avoid confusion).

Appendix B

Proposition: $\mathbf{\Pi} = \mathbf{W}(\mathbf{N}_{22}^{**})'$

Proof

From section 3, $\hat{\mathbf{x}}\overline{\mathbf{A}} = \mathbf{A}\hat{\mathbf{x}}$. Substituting A in equation (33)

$$\mathbf{\Pi} = \mathbf{B}(\mathbf{I} - \hat{\mathbf{x}}\overline{\mathbf{A}}\hat{\mathbf{x}}^{-1})^{-1}\hat{\mathbf{x}}$$
$$= \mathbf{B}[\hat{\mathbf{x}}^{-1}(\mathbf{I} - \hat{\mathbf{x}}\overline{\mathbf{A}}\hat{\mathbf{x}}^{-1})]^{-1}$$
$$= \mathbf{B}(\hat{\mathbf{x}}^{-1} - \overline{\mathbf{A}}\hat{\mathbf{x}}^{-1})^{-1}$$
$$= \mathbf{B}[(\mathbf{I} - \overline{\mathbf{A}})\hat{\mathbf{x}}^{-1}]^{-1}$$
$$= \mathbf{B}\hat{\mathbf{x}}(\mathbf{I} - \overline{\mathbf{A}})^{-1}$$
$$= \mathbf{W}(\mathbf{I} - \overline{\mathbf{A}})^{-1}$$
$$= \mathbf{W}(\mathbf{N}_{22}^{**})'$$

Q.E.D.

References

Augustinovics,M., 1970. Method of international and intertemporal comparison of structure. In: A.P.Carter and A.Brody (Editors), Contributions to Input-Output Analysis. North-Holland, Amsterdam.

Ayres,R.U. and Ayres,L.W., 1996. Industrial Ecology: Towards Closing the Materials Cycle. Edward Elgar Publishing, Cheltenham, U.K..

Baird,D., Mcglade,J.M., and Ulanowicz,R.E., 1991. The Comparative Ecology of 6 Marine Ecosystems. Philosophical Transactions of the Royal Society of London Series B-Biological Sciences, 333:15-29 pp.

Baird,D. and Ulanowicz,R.E., 1989. The Seasonal Dynamics of the Chesapeake Bay Ecosystem. Ecological Monographs, 59:329-364 pp.

Christensen,V. and Pauly,D., 1992. ECOPATH II - a software for balancing steady-state ecosystem models and calculating network characteristics. Ecological Modelling,169 -185 pp.

Cohen,J.E., Beaver,R.A., Cousins,S.H., Deangelis,D.L., Goldwasser,L., Heong,K.L., Holt,R.D., Kohn,A.J., Lawton,J.H., Martinez,N., Omalley,R., Page,L.M., Patten,B.C., Pimm,S.L., Polis,G.A., Rejmanek,M., Schoener,T.W., Schoenly,K., Sprules,W.G., Teal,J.M., Ulanowicz,R.E., Warren,P.H., Wilbur,H.M., and Yodzis,P., 1993. Improving Food Webs. Ecology, 74:252-258 pp.

Dasgupta,P. and Heal,G., 1974. Optimal Depletion of Exhaustible Resources. Review of Economic Studies,3-28 pp.

Defourny,J. and Thorbecke,E., 1984. Structural path analysis and multiplier decomposition within a social accounting matrix framework. Economic Journal,111-136 pp.

Fath,B.D. and Patten,B.C., 1999. Review of the foundations of network environ analysis. Ecosystems, 2:167-179 pp.

Finn,J.T., 1976. Measures of Ecosystem Structure and Function Derived from Analysis of Flows. Journal of Theoretical Biology, 56:363-380 pp.

Finn, J. T. Flow analysis: a method for tracing flows through ecosystem models. 1977. University of Georgia. Thesis/Dissertation

Frosch,R.A. and Gallopoulos,N.E., 1989. Strategies For Manufacturing. Scientific American, 189:144-152 pp.

Gaedke,U., Hochstädter,S., and Straile,D., 2002. Interplay Between Energy Limitation and Nutritional Deficiency: Empirical Data and Food Web Models. Ecological Monographs, 72:251-270 pp.

Ghosh,A., 1958. Input-Output Approach in An Allocation System. Economica, 25:58-64 pp.

Graedel,T. and Allenby,B., 1995. Industrial Ecology. Prentice Hall., Englewood Cliffs, New Jersey.

Graedel, T.E. D. van Beers, M. Bertram, K. Fuse, R.B. Gordon, A. Gritsinin, A. Kapur, R.J. Klee, R.J. Lifset, L. Memon, H. Rechberger, S. Spatari, D. Vexler, *in press*: Multilevel Cycle of Anthropogenic Copper, *Environmental Science and Technology*.

Hannon,B., 1973. Structure of Ecosystems. Journal of Theoretical Biology, 41:535-546 pp.

Heal,O.W. and MacLean,S.F., 1975. Comparative productivity in ecosystems - secondary productivity. In: W.H.van Dobben and R.H.Lowe-McConnel

(Editors), Unifying Concepts in Ecology. Junk, The Hague, The Netherlands, pp. 89-108.

Heymans,J.J. and Baird,D., 1995. Energy-Flow in the Kromme Estuarine Ecosystem, St Francis Bay, South-Africa. Estuarine Coastal and Shelf Science, 41:39-59 pp.

Heymans,J.J. and Baird,D., 2000a. A carbon flow model and network analysis of the northern Benguela upwelling system, Namibia. Ecological Modelling, 126:9-32 pp.

Heymans,J.J. and Baird,D., 2000b. Network analysis of the northern Benguela ecosystem by means of NETWRK and ECOPATH. Ecological Modelling, 131:97-119 pp.

Heymans,J.J. and Baird,D., 2000c. Network analysis of the northern Benguela ecosystem by means of NETWRK and ECOPATH. Ecological Modelling, 131:97-119 pp.

Heymans,J.J. and McLachlan,A., 1996. Carbon budget and network analysis of a high-energy beach/surf-zone ecosystem. Estuarine Coastal and Shelf Science, 43:485-505 pp.

Kratena, K., Chovanec, A., and Konechy, R. Eine ökolgische volkswirtschaftliche Gesammtrechnung für Österreich. Die Umwelt Input Output Tabelle 1983. 1992. Wien, Austria, Institute für sozial-, wirtschafts- und umweltpolitische Forschung. Report

Kratterl,A. and Kratena,K., 1990. Reale Input-Output Tabelle und ökologischer Kreislauf. Physica-Verlag, Heidelberg, Germany.

Kyzia, S. 2003. Personal Communication

Lennox, J. A., Turner, G., Hoffmann, R., and McInnis, B. Modelling Australian basic industries in the Australian Stocks and Flows Framework. Journal of Industrial Ecology . 2003. In Press

Leontief,W.W., 1941. The Structure of American Economy, 1919-1929. Harvard University Press, Cambridge.

Levine,S., 1980. Several Measures of Trophic Structure Applicable to Complex Food Webs. Journal of Theoretical Biology, 83:195-207 pp.

Lindeman,R.L., 1942. The trophic-dynamic aspect of ecology. Ecology, 23:339-418 pp.

Loehle,C., 1990. Indirect Effects: A Critique and Alternate Methods. Ecology, 71:2382-2386 pp.

Loreau,M., 1998. Ecosystem development explained by competition within and between material cycles. Proceedings of the Royal Society of London Series B-Biological Sciences, 265:33-38 pp.

Lotka,A.J., 1925. Elements of physical biology. Williams and Wilkins, Baltimore, USA.

Odum,E.P., 1969. The strategy of ecosystem development. Science, 164:262-270 pp.

Patten,B.C., 1982. Environs - Relativistic Elementary-Particles for Ecology. American Naturalist, 119:179-219 pp.

Patten,B.C., 1990. Environ Theory and Indirect Effects - Reply. Ecology, 71:2386-2393 pp.

Patten,B.C., Bosserman,R.W., Finn,J.T., and Cale,W.G., 1976. Propagation of cause in ecosystems. In: B.C.Patten (Editor), Systems Analysis and Simulation in Ecology. Academic Press, New York.

Patten,B.C., Higashi,M., and Burns,T.P., 1990. Trophic Dynamics in Ecosystem Networks - Significance of Cycles and Storage. Ecological Modelling, 51:1-28 pp.

Pauly,D. and Christensen,V., 1995. Primary Production Required to Sustain Global Fisheries. Nature, 374:255-257 pp.

Pedersen, O. G. Physical Input-Output Tables for Denmark. Products and Materials 1990, Air Emissions 1990-92. 1999. Copenhagen, Statistics Denmark. Report

Solow,R.M., 1974a. Economics of Resources Or Resources of Economics. American Economic Review, 64:1-14 pp.

Solow,R.M., 1974b. Intergenerational Equity and Exhaustible Resources. The Review of Economic Studies, 41:29-45 pp.

Spatari, S. et. al. Twentieth century copper flows in North America: A dynamic analysis. 2003. Unpublished Work

Stahmer, C., Kuhn, M., and Braun, N. Physische Input-Output Tabellen, Beiträge zu den Umweltökonomischen Gesamtrechnungen. 2003. Stuttgart, Metzler-Poeschel Verlag. Report

Suh, S. Use of Accumulative Structural Path Analysis for Life Cycle Assessment. 2002. Leiden, Institute of Environmental Science (CML), Leiden University. CML Working Paper. Report

Suh, S. A note on the calculus for physical input–output analysis and its application to land appropriation of international trade activities. Ecological Economics . 2003. In Press

Sundareshwar,P.V., Morris,J.T., and Koepfler,E.K., 2003. Phosphorus Limitation of Coastal Ecosystem Processes. Science, 229:563-565 pp.

Szyrmer,J. and Ulanowicz,R.E., 1987. Total Flows in Ecosystems. Ecological Modelling, 35:123-136 pp.

Treloar,G., 1997. Extracting embodied energy paths from input-output tables: towards an input-output-based hybrid energy analysis method. Economic Systems Research, 9:375-391 pp.

van der Voet,E., Guineé,J.B., Udo de Haes,H., and (Ed.), 2000. Heavy Metals: A Problem Solved? Kluwer Academic Publisher, Dordrecht, the Netherlands.

Vasconcellos,M., Mackinson,S., Sloman,K., and Pauly,D., 1997. The stability of trophic mass-balance models of marine ecosystems: a comparative analysis. Ecological Modelling, 100:125-134 pp.

VIII. An Application*

Abstract

Patterns of Greenhouse Gas (GHG) emission inducement by the supply-chain networks of 480 products and services in the United States were analyzed for 21 GHGs. Producing a dollar of a product or service generates an average of 0.36 kg of CO_2 equivalent GHGs on-site, increasing to 0.83 kg when supply-chain-induced emissions are taken into account. Services produce less than 5% of total U.S. GHG emissions, and their GHG emission intensities per dollar output are much less (0.04 kg CO_2 eq./$) than those of physical products, even when supply-chain-induced emissions are included (0.47 kg CO_2 eq./$). When both supply-chain-induced emissions and the volume of household expenditures are taken into account, however, household consumption of services proves to be responsible for 37.6% of total industrial GHG emissions in the U.S., almost twice the amount due to household consumption of electric utility and transportation. Given the current economic structure, a shift to a service-oriented economy is shown to entail a decrease in GHG emission intensity per unit GDP but an increase, by necessity, in overall GHG emissions in absolute terms.

Keywords: Greenhouse Gas (GHG); supply-chain network; service; climate change; consumption

* Originally, Suh, S., 2004: Are Services better for Climate Change?, *Submitted*.

Despite some skepticism, recent scientific evidence indicates that current level of ambient Greenhouse Gas (GHG) concentration is well above the level of natural variability and is driven by anthropogenic interventions (*1–3*). For the past 100 years global annual anthropogenic CO_2 emissions due to fossil fuel combustion have increased by approximately a factor 12, and responsibility for around a quarter of total accumulative global emissions during the period has been ascribed to the U.S. (*4–6*). In the U.S., major GHG emission sources include electric power production (subsequently referred to as 'electric utility'), transportation and several manufacturing industries, including petroleum refining, iron and steel manufacturing and cement production, which generate around 80% of the total (*7*). In contrast, the service sector (excluding electric utility and transportation), comprising banking, hospitals and the retail trade, for example, as well as computer and data processing services, accounts for less than 5% of total U.S. GHG emissions (Fig. 1) (*7*). Economically, however, the services sector is the largest and the fastest growing sector in the U.S. The relative share of services in personal consumption expenditure has been steadily rising, mainly by encroaching on the share of manufactured products (Fig. 2). Over the past ten years, the size of services in aggregate Gross Domestic Product (GDP) has grown by an average of 6.3% a year in the U.S., thus doubling every 11 to 12 years (*8*). Today, the services sector contributes around 60% of total U.S. GDP (*8*).

In a recently completed database project, major U.S. environmental emission inventories, including the national Greenhouse Gas (GHG) Inventory, Toxics Releases Inventory (TRI), National Toxics Inventory (NTI) and National Environmental Trends (NET) database were linked with the supply-chain networks of 480 products and services, based, wherever possible, on the most detailed 6-digit Standard Industry Classification (SIC) codes. The resulting database contains a total of 1344 environmental interventions, including emissions of 21 GHGs, and their inducement structure as described by 1998 detailed U.S. national accounts (*9*, *10*). The present study used this database to examine the implied contribution of services to climate change, considering both direct GHG emissions and emissions induced through supply-chain networks. Throughout the analysis, Global Warming Potential (GWP) 100 by Houghton *et al.* (*11*) is used to aggregate the 21 GHGs into CO_2 equivalents, and all prices are in 1998 producer prices. 'Services' in this paper are defined in a narrow sense to exclude the categories of Electric utility, Steam supply and Transportation services.

The results show that production of a dollar of product or service generates, on average, 0.36 kg of on-site CO_2 equivalent GHGs. By far the largest on-site GHG emitter per dollar is Lime production, generating 20.7 kg of CO_2 equivalent global warming impact per dollar (*12*) (Table 1). Next in intensity is the Electric utility sector, with its major CO_2 emissions due to

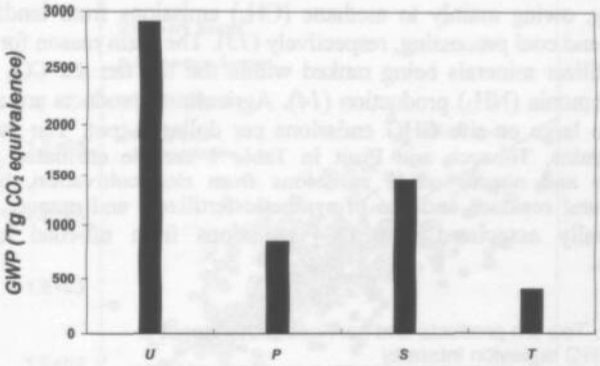

Fig. 1 Direct GHG emissions of Electric utility and Transportation (*U*) and primary (*P*), secondary (*S*) and tertiary (*T*) sectors in the U.S., 1998 (*30*).

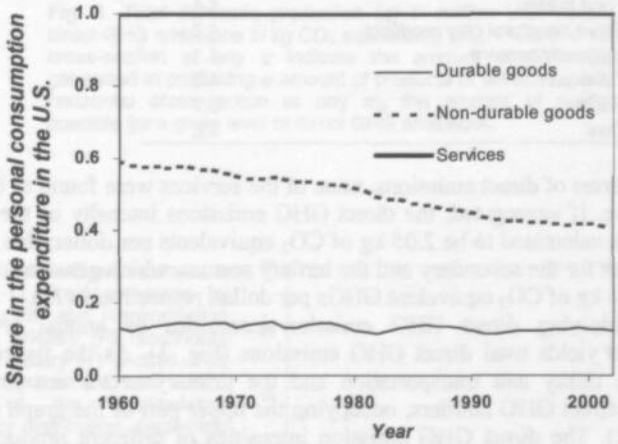

Fig. 2. The share of durable goods such as housing and furniture in total consumption expenditure, in constant prices, has been remarkably stable over the four decades since 1960, whereas services have encroached mainly on the share of non-durable goods, which are major manufacturing goods. In the U.S, the break-even point in total consumer expenditure between services and non-durable goods, in constant prices, was reached in 1967 (*3*).

coal and other fossil fuel combustion. Sanitary services and steam supply as well as Coal production are calculated to be high in direct GHG emission intensity, owing mainly to methane (CH_4) emissions from landfill and to mining and coal processing, respectively (*13*). The main reason for Chemical and fertilizer minerals being ranked within the top ten are CO_2 emissions from ammonia (NH_3) production (*14*). Agricultural products are also found to cause large on-site GHG emissions per dollar output. The inclusion of Food grains, Tobacco and Fruit in Table 1 can be attributed largely to methane and nitrous oxide emissions from rice cultivation, burning of agricultural residues and use of synthetic fertilizers and manure, the latter additionally associated with CO_2 emissions from off-road agricultural vehicles.

Table 1. Top ten products and services with respect to direct GHG emission intensity

Rank	Product/service category	GWP intensity (kg CO_2 eq./$)
1	*Lime*	20.7
2	*Electric utility*	9.5
3	*Sanitary services and steam supply*	7.5
4	*Chemical and fertilizer minerals*	7.4
5	*Food grains*	4.4
6	*Other structural clay products*	4.3
7	*Hydraulic cement*	4.1
8	*Tobacco*	4.0
9	*Fruits*	3.7
10	*Coal*	3.6

In terms of direct emissions, none of the services were found to be GHG-intensive. If aggregated, the direct GHG emissions intensity of the primary sector is calculated to be 2.05 kg of CO_2 equivalents per dollar; this figure is far lower for the secondary and the tertiary sectors, which generate only 0.30 and 0.04 kg of CO_2 equivalent GHGs per dollar, respectively (*15*).

Multiplying direct GHG emission intensities by annual production volumes yields total direct GHG emissions (Fig. 3). As the figure shows, Electric utility and transportation and the primary sector are among the largest direct GHG emitters, occupying the upper part of the graph (see also Table 2). The direct GHG emission intensities of different product groups can be clearly distinguished, as most of the plots of the primary and tertiary sectors are aligned around the upper and lower parts, respectively, of the linear regression line of the secondary sector. Nonetheless, in terms of the overall size of economy, services are among the largest, occupying the right side of the graph. In general, services occupy the lower-right part of Fig. 3, indicating their high GHG emission efficiency per dollar output with respect to direct emissions. For a given level of economic production, the difference in direct GHG emissions between services and other products, reflected in a

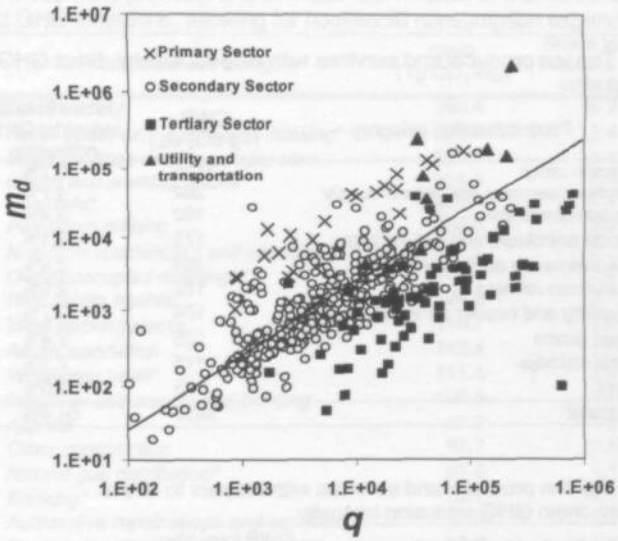

Fig. 3. Total domestic production (q) in million U.S. dollars vs. direct GHG emissions in kg CO_2 equivalents (m_d). Plots in a vertical cross-section at any q indicate the amount of GHG directly generated in producing q amount of products or services, plots in a horizontal cross-section at any m_d the amount of production possible for a given level of direct GHG emissions.

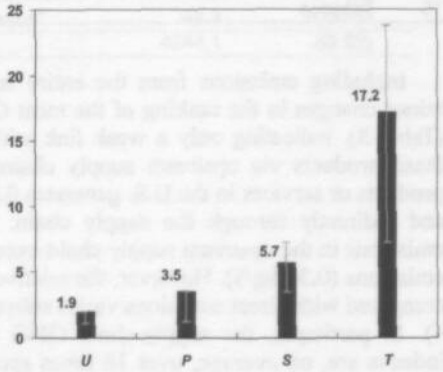

Fig. 4. Total GHG emissions as a multiple of direct emissions by Electric utility and Transportation (*U*) and primary (*P*), secondary (*S*) and tertiary (*T*) sectors. The gray bar indicates the 20 - 80% range of the accumulative frequency distribution, neglecting one extreme value on each side.

vertical cross-section of the graph of Fig. 3, may be as high as a factor 10^3.

Table 2. Top ten products and services with respect to total direct GHG emissions

Rank	Product/service category	GWP (Tg CO_2 eq.)	Share in total industrial GHG emissions
1	*Electric utility*	2175	38.7%
2	*Sanitary services and steam supply*	262	4.7%
3	*Air transportation*	190	3.4%
4	*Crude petroleum and natural gas*	173	3.1%
5	*Blast furnaces and steel mills*	164	2.9%
6	*Petroleum refining*	162	2.9%
7	*Trucking and courier services, excl. air*	154	2.7%
8	*Feed grains*	135	2.4%
9	*Meat animals*	115	2.1%
10	*Coal*	83	1.5%
	Subtotal	3613	64.4%

Table 3. Top ten products and services with respect to direct and supply-chain GHG emission intensity

Rank	Product/service category	GWP intensity (kg CO_2 eq./$)
1	*Lime*	22.1
2	*Electric utility*	10.2
3	*Sanitary services and steam supply*	8.5
4	*Chemical and fertilizer minerals*	8.4
5	*Miscellaneous livestock*	5.8
6	*Meat animals*	5.6
7	*Hydraulic cement*	5.5
8	*Food grains*	5.4
9	*Other structural clay products*	5.3
10	*Tobacco*	4.9

Including emissions from the entire supply-chain network led to only minor changes in the ranking of the most GHG emission intensive products (Table 3), indicating only a weak link with other products and services of these products via upstream supply chains (*16*). On average, 1 dollar of products or services in the U.S. generates 0.83 kg of CO_2 equivalents directly and indirectly through the supply chain. In general, then, indirect GHG emissions in the upstream supply chain exceed the average intensity of direct emissions (0.36 kg/$). However, the relative magnitude of indirect emissions compared with direct emissions varies substantially from sector to sector (Fig. 4). In particular, the supply-chain GHG emissions of the tertiary sector induces are, on average, over 16 times greater than direct GHG emissions.

Table 4. Top thirty products and services with respect to total direct and indirect GHG emissions, allowing for household consumption expenditure

Rank	Product/service category	GWP (Tg CO_2 eq.)	Share in total industrial GHG emissions
1	*Electric utility*	984.4	16.2%
2	*Retail trade, excl. eating and drinking**	326.8	5.4%
3	*Motor vehicles and passenger cars*	310.0	5.1%
4	*Eating and drinking places**	301.3	5.0%
5	*Hospitals**	268.3	4.4%
6	*Petroleum refining*	183.5	3.0%
7	*Non-farm residential 1 unit structures*	161.2	2.7%
8	*Owner-occupied dwellings**	148.7	2.4%
9	*Real estate agents**	124.5	2.1%
10	*Meat packing plants*	116.7	1.9%
11	*Air transportation*	112.4	1.9%
12	*Wholesale trade**	111.8	1.8%
13	*Industrial and commercial building*	100.5	1.7%
14	*Apparel*	95.2	1.6%
15	*Other construction*	94.7	1.6%
16	*Natural gas distribution**	67.6	1.1%
17	*Banking**	65.7	1.1%
18	*Automotive repair shops and services**	64.8	1.1%
19	*Poultry slaughtering and processing*	59.8	1.0%
20	*Sanitary services and steam supply**	58.8	1.0%
21	*Doctors and dentists**	58.5	0.96%
22	*Trucking and courier services*	57.4	0.95%
23	*Alterations of non-farm construction*	53.4	0.88%
24	*Insurance carriers**	50.2	0.83%
25	*Other State and local government**	47.2	0.78%
26	*Nursing and personal care facilities**	46.1	0.76%
27	*Water supply and sewerage systems**	45.9	0.76%
28	*Computer and data processing services**	43.2	0.71%
29	*Telephone and other communication**	43.2	0.71%
30	*Other amusement and recreation**	42.3	0.70%
	Subtotal	4244.1	69.9%

* Services

Nevertheless, the GHG emission intensities of services are still lower than those of other products. On average, the total direct and supply-chain GHG emissions induced per dollar output decrease as follows: Electric utility and Transportation (5.3 kg CO_2 eq./$), primary sector (3.1 kg CO_2 eq./$), secondary sector (1.0 kg CO_2 eq./$), and tertiary sector (0.5 kg CO_2 eq./$).

Linking total direct and supply-chain GHG emission intensities with household consumption expenditure data yields Table 4 (*10*). The composition of the thirty largest GHG emission inducing products and services in Table 4 differs substantially from that of the other three tables. First, the list includes the most basic necessities of energy, shelter, mobility, health care, food, *etc.* Second, except for a few items such as Electric utility, the products and services listed in Table 4 do not have high GHG emission intensities. The total direct and supply-chain GHG emission intensity of Motor vehicles and passenger cars, for instance, is 1.08 kg CO_2 eq., only slightly higher than the average, indicating in turn the high consumption volume of these products and services. Third, most of the products and services in Table 4 are associated with supply-chain GHG emissions rather than direct emissions. For instance, the total direct and supply-chain GHG emissions induced by household consumption of Motor vehicles and passenger cars, due to direct consumption of Motor vehicle parts and accessories, Automotive stampings, Miscellaneous other plastics products, *etc.*, occur in far-removed upstream processes such as Blast furnaces and steel mills (15.8%), various organic and inorganic chemical processes (10.8%), various mining (5.1%), Electric utility (21.4%) and so on.

Another striking difference is that around half the items on the list are now services. A total of 37.6% of overall GHG emissions are induced through household consumption of services (Fig. 5). Nearly half the GHG emissions induced by services are associated with Electric utility and Transportation (45.1%). Adding on-site GHG emissions from the primary and secondary sectors upstream of the services, 84.9% of the total emissions due to the household consumption of services take place outside the sector itself (Fig. 5). Ranked within the top 30 are even services that do not generally supply tangible materials, like Hospitals (5th), Banking (17th) and Insurance carriers (24th). These services induce indirect GHG emissions at various industries, including, in particular, Electric utility, Transportation and Construction. Hospitals, for instance, rely on direct GHG emissions from Electric utility (37.0%), Sanitary services and steam supply (7.7%), various agricultural products (4.5%), Crude petroleum and natural gas (3.8%), Blast furnaces and steel mills (3.0%), Air transportation (2.8%), Platemaking and related services (2.7%), various construction and its maintenance (2.5%), etc. These indirect emissions are induced primarily by the direct consumption of Electric utility (25.5%), Sanitary services and steam supply (5.1%), Real estate agents (6.4%), Industrial inorganic and organic chemicals (5.0%), Industrial and commercial buildings (4.4%), Drugs (3.5%), Surgical and

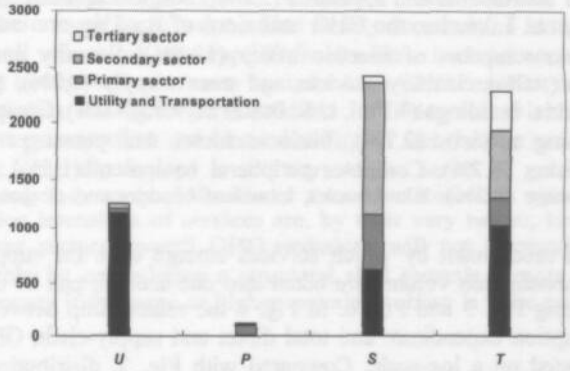

Fig. 5. Total direct and supply-chain GHG emissions induced by household consumption expenditure on Electric utility and Transportation (*U*) and primary (*P*), secondary (*S*) and tertiary (*T*) sectors, broken down according to on-site emission sources.

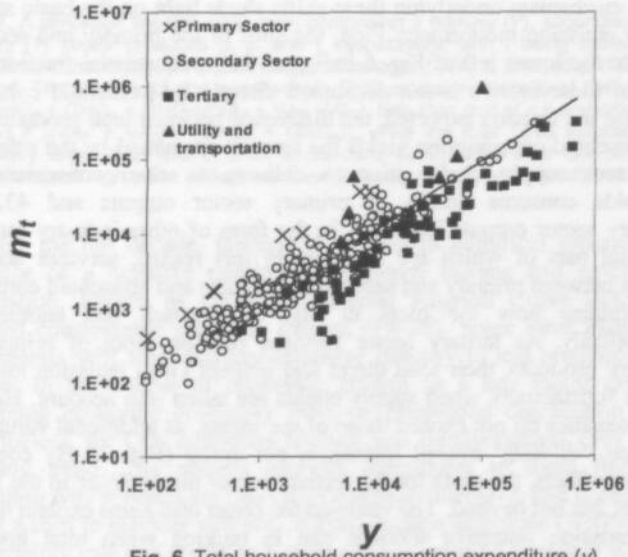

Fig. 6. Total household consumption expenditure (y) in million U.S. dollars vs. total GHG emission inducement in kg CO_2 equivalents (m_t).

medical instruments and apparatus (2.1%), Surgical appliances and supplies (1.9%), *etc.* Likewise, the GHG emissions of Banking are induced through direct consumption of Electric utility (12.0%), Security and commodity brokers (9.0%), Sanitary services and steam supply (7.2%), Industrial and commercial buildings (4.7%), U.S. Postal Service (4.0%), Computer and data processing services (2.7%), Motor vehicles and passenger cars (2.2%), Advertising (1.7%), Computer peripheral equipment (1.5%), Warehousing and storage (1.2%), Blankbooks, looseleaf binders and devices (1.0%), *etc.* (*17*).

The mechanism by which services emerge once the supply chain and total consumption volume are taken into due account can be understood by comparing Fig. 3 and Fig. 6. In Fig. 6 the relationship between household consumption expenditure and total direct and supply-chain GHG emissions are plotted on a log-scale. Compared with Fig. 3, distribution has shifted upwards in Fig. 6 as supply-chain GHG emissions are added to direct emissions. Furthermore, the distribution is denser in Fig. 6 than in Fig. 3. However, while the plots for the primary and tertiary sectors asymptotically approach the secondary sector, they do not generally overlap. Another interesting observation is that the plots for the primary and secondary sectors have undergone a shift to the lower left, while this is not generally the case for the tertiary sector.

The mechanism underlying these shifts sheds light on the basic structure of GHG emission inducement. First, the shift of the primary and secondary sectors to the lower left of Fig. 6 indicates that a substantial fraction of the output of these sectors is not consumed directly by household consumers. Excluding the fraction exported, the difference between total production and total household consumption yields the amount consumed by the subsequent downstream supply chain prior to delivery to final consumers. U.S. households consume 86.0% of primary sector outputs and 43.8% of secondary sector outputs indirectly in the form of other industry outputs, a substantial part of which are services. In this regard, services act as an interface between primary and secondary products and household consumers. This explains how the plots in Fig. 6 approach one another only asymptotically. As tertiary sector services rely on input of primary and secondary products, their total direct and indirect GHG emission intensities increase substantially when supply chains are taken into account. However, these intensities do not exceed those of the inputs, as additional value-added is created, 'diluting' overall intensities per dollar (Fig. 7). By combining these two effects, the plots for the tertiary sector move closer to the level of its inputs, but not beyond. The value-added effect also helps explain how less GHG emission intensive services rise in ranking when total household expenditure is taken into account (Table 4). As these products and services are located at the near-to-consumer side of the supply chain, they will have undergone longer supply paths and corresponding value-added processes

before being delivered to household consumers. These services therefore generally have a much larger value-added moiety accumulated in their price and the overall volume of consumption for the same material contents will consequently be higher. In the same light, the high GHG emission intensities of basic materials and agricultural products in Tables 1 to 3 reflect their relatively low prices, which can be ascribed to the fact that the processes in question are generally located at the start of the series of value-adding processes along the supply-chain. Under these circumstances, although the GHG emission intensities of services are, by their very nature, lower than those of other sectors, overall GHG emissions will not automatically be reduced merely by engendering a structural shift towards a more service-oriented economy if the same or higher material welfare is to be maintained (Fig. 7).

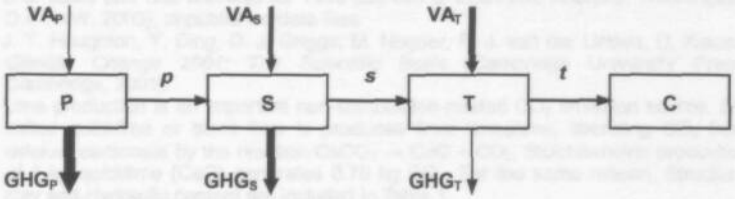

Fig. 7. A simplified linear supply chain comprising a primary (P), secondary (S) and tertiary (T) sector produces *p*, *s*, and *t*, respectively, with t being delivered to a household consumer (C). At each stage, value added (VA) is created and GHGs are emitted. The total direct and supply-chain GHG emission intensity of *t* is calculated as $(GHG_P + GHG_S + GHG_T)/(VA_P + VA_S + VA_T)$, less than that of *s* if and only if $(VA_T / GAG_T) > [(VA_P + VA_S) / (GHG_P + GHG_S)]$, while the total GHG induced by *t* is invariably larger than that of *s* for a non-zero GHG_T. With their low direct GHG emissions and high value added, services generally satisfy these conditions.

Over the last decade, theoretical as well as empirical grounds for the existence of a negative relationship between income and environmental degradation, known as the Environmental Kuznets Curve (EKC), have attracted considerable scientific interest (*19–26*). Some have identified the spontaneous shift from material-intensive industry to less material-intensive services in the course of economic growth as a key factor driving the decoupling economic prosperity from environmental degradation (*27–29*). Nevertheless, for CO_2 emissions Shanfik and Bandyopadhay (*30*) found an opposing trend. The present analysis contributes to these findings, by explaining why services are less GHG emission intensive, and necessarily so, so that a shift to services will not, in itself, reduce aggregate GHG emissions. It is certainly true that a shift to a more service-oriented economy will reduce the GHG emission intensity per unit GDP and is desirable, especially in the context of U.S. climate change policy (*31*). However, mitigation of climate change, which requires actual reduction of GHG emissions in absolute terms,

is not achieved automatically in the course of economic growth and associated structural change unless the services become independent of embedded GHG emission intensive products (*32*, *33*). Efforts need to be devoted to developing technologies, changing consumption patterns and efficiently managing materials and energy in order to physically reduce GHG emissions and thus the intensity of global climate change.

References and Notes

1. S. W. Pacala, E. Bulte, J.A. List, S. A. Levin, *Science* **301**, 1187 (2003).
2. T. R. Karl, K. E. Trenberth, *Science* **302**, 1719 (2003).
3. T. J. Crowley, *Science* **289**, 270 (2000).
4. G. Marland, T. Boden, R. J. Andres, *Global CO_2 Emissions from Fossil-Fuel Burning, Cement Manufacture, and Gas Flaring: 1751-2000* (Carbon Dioxide Information Analysis Center, Oak Ridge National Laboratory, Oak Ridge, TN, 2002).
5. K. A. Baumert, N. Kete, *Climate protection in a disparate world* (World Resources Institute (WRI), Washington, D.C., NW, 2002).
6. P. Baer *et al.*, *Science* **291**, 827 (2001).
7. *Inventory of U.S. Greenhouse Gas Emissions and Sinks: 1990 –2001*, (EPA, Washington, DC., NW., 2003).
8. *National Income and Product Accounts (NIPA)* (Bureau of Economic Analysis, Washington, D.C., NW. 2003).
9. S. Suh, *Comprehensive Environmental Data Archive (CEDA) 3.0* (Institute of Environmental Science (CML), Leiden, 2004).
10. *U.S. Make and Use Matrices for 1998* (Bureau of Economic Analysis, Washington, D.C., NW. 2003), unpublished data files.
11. J. T. Houghton, Y. Ding, D. J. Griggs, M. Noguer, P. J. van der Linden, D. Xiaosu, *Climate Change 2001: The Scientific Basis* (Cambridge University Press, Cambridge, 2001).
12. Lime production is an important non-combustion-related CO_2 emission source. So-called quicklime or burnt lime is produced from limestone, liberating CO_2 from calcium carbonate by the reaction $CaCO_3 \rightarrow CaO + CO_2$. Stoichiometric production of 1 kg quicklime (CaO) generates 0.78 kg CO_2. For the same reason, Structural clay and Hydraulic cement are included in Table 1.
13. The landfill activities classified under Sanitary services and steam supply are the largest methane source in the U.S., generating 9.6 million tons of methane in 1998. CO_2 emissions from waste incineration are an additional source of global warming impact in this category. There is methane stored in coal and/or its earth matrix, which is freed during mining, crushing and pulverization.
14. Ammonia production is another major non-combustion-related source, thanks to the production process of the hydrogen required to form ammonia together with nitrogen. Hydrogen is generally extracted from natural gas by means of chemical reactions known as steam reforming and watergas shift: $CH_4 + H_2O \rightarrow CO + 3H_2$ and $CO\ (g) + H_2O \rightarrow CO_2 + H_2$. Stoichiometrically, 1kg ammonia produced using these reactions as a hydrogen source generates 0.97 kg CO_2, a figure rising to 1.29 kg CO_2 if only the steam reforming process is used,
15. Using the BEA classification, primary sector: 10100 – 100000; secondary sector: 110101 – 641200; tertiary sector: 650100 – 820000, excluding Electric utility and Transportation (Railroads and related services, Local and suburban transit and interurban highway passenger transportation, Trucking and courier services, excluding air, Water transportation, Air transportation, Freight forwarders and other transportation services, Electric utility, and Sanitary services and steam supply).
16. Some livestock products came into the picture as they involve consumption of Feed grains and Prepared feeds, *etc.* that are already high in GHG emission intensity.
17. Detailed background data are provided with the supporting information.
18. U.S. households indirectly consume 86.0% and 43.8% of primary and secondary sector outputs, respectively, in the form of other products or services. Although the tertiary sector is associated with relatively short downstream supply chains, 46.4% of total service outputs are consumed indirectly by households, mainly through other services, reflecting strong service-to-service interactions.
19. *World development report 1992* (World Bank, Washington, D.C., NW. 1992).
20. W. Beckerman, *World Dev.* **20**: 481 (1992).
21. G. M. Grossman, A. B. Krueger. *Q. J. Econ.* **112**, 353 (1995).

22. K. Arrow *et al.*, *Science* **268**, 520 (1995).
23. N. Myers, *Science* **276**, 53 (1997).
24. J.R. Vincent, T. Panayotou, *Science* **276**, 55 (1997).
25. R. Dobers, R. Wolff, *Bus. Strategy Environ.* **8**, 31 (1999)
26. A. Bruvoll, H. Medin, *Environ. Resour. Econ.* **24**, 27-48 (2003).
27. O. Bernardini, R. Galli, *Futures* **25**, 431 (1993).
28. M. Jänicke, M. Binder, and H. Monch, *Environ. Resour. Econ.* **9** 467 (1997).
29. T. Panayotou, *Economic growth and the environment*, (United Nations Economic Commission for Europe, Geneva, 2003).
30. N. Shafik, S. Bandyopadhay, E*conomic growth and environmental quality: time series and cross country evidence* (Background paper for the World Development Report, World Bank, Washington, D.C., N.W., 1992).
31. In February 2002, the U.S. President committed the country to a strategy to reduce greenhouse gas intensity per dollar production by 18% over the next 10 years, slightly more than the rate of reduction since 1990, achieved in the absence of substantial policy coordination; U.S. Climate Change Policy: Fact Sheet (White House, Office of the Press Secretary, Washington, D.C., N.W., 2003).
32. A. L. White, M. Stoughton, L. Feng, *Servicizing: The Quiet Transition to Extended Product Responsibility* (Tellus Institute, Boston, MA., 1999); E. D. Reiskin, A. L. White, J. Kauffman Johnson, T. J. Votta, *J. Ind. Ecol.* **2-3**, 19 (2000); R Lifset, T. Lindhqvist, *J. Ind. Ecol.* **4**, 10 (2000) explore another form of service and its environmental benefits in which the product life cycle is managed more efficiently through leasing.
33. For over four decades, U.S. production of manufactured goods has generally followed an upward trend, although its share in GDP has been gradually surpassed by services.

IX. Conclusions and Discussion

1. Conclusions

The method and data for materials and energy flow analysis in LCA, IOA, MFA and ecological network flow analysis are presented and are applied to a case of the U.S. Major conclusions are summarised below.

- The materials and energy flow analysis in LCA, IOA, MFA and ecological network flow analysis can be reformulated to share a common mathematical ground without loss of specificity for each of the areas of application (from Chapters III, VI, and VII).

- Generalisation of network flow analysis enables cross-discipline comparisons, hybridisation of different approaches and a better communication between the scientists involved (Chapters III, VI, and VII).

- The integrated hybrid approach of process-LCA and IO-LCA enables full feedback loops between the two systems and expands the system while preserving process-level detailed information. As the integrated hybrid approach is fully consistent, various analytical algorithms that have been developed for LCA or IOA can be applied (Chapters II, III, IV, and V).

- Current ISO standards on LCA do not preclude an input-output model to be used in describing a product system. Moreover, selecting a system boundary in compliance with ISO standards is, principally, impossible without using the input-output model due to the requirements on 'elementary flows' for the cross-boundary flows (ISO 14040 5.1.2.2) and the justification of negligibility of cut-offs (ISO14041 5.3.3). Hybrid techniques using input-output analysis can and should therefore form a central element of ISO-compatible system boundary selection practices (Chapters II and V).

- Assuming that the usable output of an industry is responsible for the whole factor inputs to the industry regardless of whether they are actually used to generate wastes or to produce usable product, that is the approach used in LCA for over a decade, the problem of treating waste in PIOT can be better managed (Chapter VI).

- Existing network flow analysis approaches in ecology, namely, environ analysis; total flow analysis; endogenised input approach; and use of transitive closure matrices, all can be generalised as forming one approach. Network flow analysis in ecology often leads to Ghosh's supply-driven model, while the demand driven model is dominant in economics, including LCA (Chapter VII).

- A shift to service-oriented economy in the course of economic growth and associated structural change, entails a decrease in GHG emission intensity per unit of GDP, but will not automatically reduce the overall GHG emission in absolute terms (Chapter VIII).

2. Recommendations

General recommendations

1) An explicit reference to IOA and hybrid LCA in the ISO 14040 series, particularly in the new LCA work items, is desirable.

2) In performing a process LCA study, it is recommended to document at least the prices of cut-offs which will allow later users to adopt a hybrid model.

3) A step-wise approach for defining the system boundary is recommended starting from a few important processes worked out in detail and linked to the IO system using the hybrid approach. Next, the resolution can be increased, focusing on where the main contributions and uncertainties are, until a sufficient quality of result has been obtained.

4) Development of easy-to-use software tools for hybrid LCA is highly desirable.

5) An international co-ordination to building a reliable and consistent environmental IO database with trade links is highly desirable.

6) A more extensive cross-discipline survey of the models and tools that has been developed for network flow analysis is recommend.

7) A formal platform where network flow analysts of different disciplines can meet and discuss will be beneficial for all disciplines.

Specific future researches topics

High priority future research topics include:

1) The assessment options for applying E. Odum's theory of ecological succession also in industrial ecology, using the general framework of network flow analysis.

2) The comparison between food web research in ecology and network flow analysis modelling in other disciplines, notably IOA.

3) An integrated ecology-economy model based on the generalised framework, especially focussing on the integration or hybridisation

between the Ghosh's supply-driven model and Leontief's demand driven model.

4) The implications of different waste treatment approaches in PIOT for decision support.

5) Methodological developments and case studies on hybrid LCA focusing on, especially, the definition of the internal system boundary between the IO part and the process system part.

6) Quantitative uncertainty analysis of network flow models.

3. Discussion

A model is the medium for scientists to understand certain phenomena. The generalised linear network flow analysis model likewise reflects how analysts understand the system, be they industrial networks, product systems, food webs, *etc.* In general, the network flow model consists of system components, flows between the components, and incoming and outgoing flows across the outer system boundary. The flows to a component may physically constitute a component, as in the predator-prey relationship in a food web, or may not as in the ancillary materials or capital goods in a product system. A linear network flow model assumes that the input-output ratios of flows in a component of a system are fixed. Under this assumption, a demand-driven model calculates the amount of inputs needed for a given system output, and supply-driven model calculates the amount of outputs enabled by given system inputs. Remained at this level of abstraction, I will discuss several issues reflected by the current work.

Options and limitations of linear network flow analysis

The network flow analysis models presented here is basically a system of linear equations, with both advantages and disadvantages. While in some cases a linear relationship can be used as a good approximate for non-linear relations, linear modelling cannot deal with highly non-linear relationships, which may be of prime importance in certain decision situations, like the set-up of stable green electricity markets (Vogstad, 2004). Furthermore, caution needs to be exerted when the results of linear network analysis as presented here are applied for the purpose of prediction. Due to the assumption of fixed input-output ratios in the network flow analysis, the model is valid within the window of marginal changes. If certain dramatic changes, that involve altering the state of the system, are considered, the assumption used becomes invalid and may not reflect reality anymore. A predator-prey relationship in a food web, for instance, changes over time for a variety of reasons, including changes in patterns of competition, seasonal changes, and, most

fundamentally, behavioural indeterminacy. In such a case, although the network flow analysis provides a good basis for understanding the system, the system may not behave as analysed.

However, there is still an important role for linear network flow models. First, they provide a basic accounting scheme for a network structure. The complexity, non-linearity, and inherent indeterminacy of a system's behavior does not reduce the need for more basic data, which always forms a basis for further sophistication in modelling. The linear system is a well-defined, efficient way of presenting fundamental data for a network structure in LCA, IOA, and food web research. Second, the framework enables a number of important analytical measures. A variety of analytical tools based on the input-output framework has been proposed and utilised in unravelling the complex interdependencies between the components of a system. Dealing with a complex system often requires a set of indicators that reveal some key properties of the system. By virtue of its common structure, the linear framework provides a number of universal indicators that can be applied to different systems and enable better inter-system comparison. Third, as discussed in the text, the linear network flow models utilised in various different disciplines can be presented on the basis of a more basic and unified framework. Seemingly different proposals can be successfully interpreted using this framework. Such an interpretation will assist a better communication among network flow analysis communities across disciplines. Fourth there are cases where non-linear relationships are deliberately avoided, to simplify the analysis to a level where operational modelling becomes feasible. For instance, a non-linear LCA model, though it may be closer to reality, may result in different LCA scores for the same products, depending on the time when each of them is produced, for instance, which deviates from what is generally accepted as an LCA result.

The concept of hybrid analysis

Large part of the current study is devoted to the subject of hybrid approach, where IOA and LCA are linked with each other. The basic concept of hybrid analysis is currently being applied for broader areas in LCA (Udo de Haes *et al., in press*). Here I will briefly discuss the concept of a hybrid analysis in more general terms.

In reality, the quantity of flows between the components of a network system is determined by various factors. A linear network flow model is a simplification of reality, so that the flows between the components are assumed to be determined by the input-output ratio of each component (**A**), system input or waste vs. output ratio (**B**), and the system output (**y**). In other words

(1) $$\mathbf{M} = f(\mathbf{A}, \mathbf{B}, \mathbf{y}),$$

where **M** can be any of the various network flows discussed in this book. In network flow analysis, **A** and **B** are generally assumed to be fixed so that **M** becomes a function of only **y**, or

(2) $$\mathbf{M} = f(\mathbf{y}).$$

The resulting **M** is a model output, which may be and generally will be different from reality. In reality, **M** may be determined by various other factors, which are excluded from the system relations of the model, and of which the influences to the final results are assumed to be negligible, or are the subject of additional other non-integrated types of modelling. Suppose that those neglected factors do influence the results and thus preferably would have to be included within the system model. Then a more complete model can be written as

(3) $$\mathbf{M}' = f(\mathbf{y}, \mathbf{C}),$$

where **C** is a new unknown additionally considered. The simplest case of the extended model would be that $\mathbf{M}' = \mathbf{M} + \mathbf{C}$, where the extended model result is the sum of additional unknowns and the truncated model output, although there can be more complex cases. Suppose further that

(4) $$\mathbf{C}' = g(\mathbf{y}),$$

where $\mathbf{C}' \approx \mathbf{C}$, and g is another network flow model in this case, an environmental input-output model. In hybrid approaches the overall results is calculated as $f \circ g$, a product of the two function or

(5) $$\mathbf{M}'' = f(\mathbf{y}, g(\mathbf{y})),$$

so that the overall model is still a function of **y**, but uses more than one type of functional relation.

In an LCA context, $\mathbf{M}'' = \mathbf{M} + \mathbf{C}'$ covers the case of tiered hybrid analysis. The result of (5) is generally closer to the real value than that of (2), because the cut-offs initially set to zero are now being estimated. Setting those cut-offs equal to zero introduces a systematic error of underestimation while estimating them using (4) at worst is random error. But as compared to the hybrid approach in (5) the approach in (3), where **C** is calculated under

consistent principles, is closer to reality. In an LCA context, the treatment of **C** in (3) this means that cut-offs are calculated by extending the system to cover the whole economy at a process-level resolution. Though such a model may be highly desirable in principle, it is difficult to attain in reality given the enormous amount of resources and time required. The approach depicted by (5) is more cost-effective as it utilises existing framework and data shown by *g* (see also Udo de Haes *et al.*, *in press*).

Interpretation of the supply-driven model

Dietzenbacher (2003) raised an issue of interpretation for supply-driven model by Ghosh. Dietzenbacher (1997) reinterpreted the supply-driven model as a price model. By increasing or decreasing the system inputs in monetary terms, the supply-driven model calculates the increase or decrease in production in monetary term, and such changes may be done by changing the prices without involving any changes in actual quantity. Although this fact does not disqualify the interpretation of the results as increase (or decrease) in production in monetary term, it does influence the interpretation in physical quantity terms. In an economic context, it is hard to think of the situation where certain increase in an input to an industry always increases its output proportional to the input, where other inputs remain constant. If the question is taken to be in price terms, the results of the supply-driven model can successfully explain how increase in input cost propagates through the supply-chain (Dietzenbacher, 1997).

An interesting question is then when the supply-driven model can be used as a physical quantity model. First, one can think about a process where an input and only that input is the limiting factor of the system under consideration. A nuclear power plant in short of uranium and thus operating under its full capacity could be an example. If other costs (and related physical flows) than uranium are negligible, the increased uranium input will lead to an increased electricity output, not necessarily proportionally. However, in its subsequent downstream processes, the increase in electricity input will hardly ever increase these further outputs proportionally. Even if electricity is again assumed to be the only constraint in subsequent downstream processes and so on, the model becomes invalid as soon as there is a process that requires output from the others as inputs. Therefore, in an economic context, it is very difficult to find the real-life situations where the supply-driven model can be interpreted as a quantity model.

In the context of ecosystem networks, however, the quantity model is generally more acceptable. Consider, for instance, a nitrogen deficient freshwater ecosystem where run-off of nitrogen fertiliser from a nearby farm raises the nitrogen uptake and the rate of growth of autotrophs and subsequently those of their predators. This chain of growth will propagate until the system faces another constraint. The reason why the supply-driven

model as a quantity model is more acceptable in ecosystem network is due to some unique properties that the whole system can be constrained by one input and the component of a system tend to make use of available inputs and grow as much as possible until the system is saturated, again highlighting the basic differences between the ecosystem and economic systems (*cf.* Odum, 1969).

New questions

In this thesis I tried to provide a generalised conceptualisation of systems modelling that is consistent with the work of several distinct communities of researchers. Such generalisation may open up new questions that cross over the concerns of these communities and therefore could not be readily addressed before. Some new questions have been indicated in section 2, Recommendations, and a further exploration will be desirable. Here are some examples of such questions that would be of interest.

The global ecosystem has maintained relatively stable materials and energy cycles for a reasonably long period of time before intensive human interventions took place. The homeostasis of an ecosystem and the mechanism how an ecosystem achieves it have important implications in the context of sustainability discourses. The structure of materials and energy flows in a system, regardless of being an ecosystem or an industrial system, can now be described on the basis of a consistent framework, indicating how their materials and energy flows are structured. How they are related to the homeostasis of the system forms a challenging question, of central importance in understanding the structure of an envisaged sustainable society.

The network analysis framework presented in this thesis forms a common basis of structural comparison in and between both ecosystems and industrial systems. Questions on differences and similarities in materials and energy cycles between the two systems, and their explanation, relate to central subjects in industrial ecology in general, and require further elaboration. Answering such questions can bring up some general principles in industrial design.

As those models in different fields of research can be represented on the same mathematical basis, questions on how similar concepts have been developed and applied in different disciplines can be readily addressed. The concepts of keystone species and interaction strengths in ecology, for instance, are closely related to the key sector identification methods and fields of influence studies in IO economics. Allocation in LCA versus the make and use framework in IO economics; prospective LCA versus marginal economic models; and treatment of waste in different models are a few

examples of cross fertilisation. Approaches used by the other discipline may allow us an additional insight into the question at hand.

The concept of hybrid analysis, where heterogeneous analytical tools and data sets are inter-linked, opens up another interesting question area. Hybrid analysis forms a main strategy to overcome the limitations of single tools, specifically LCA (Udo de Haes *et al.*, *in press*). However, the area of application is not limited to the hybridisation between IOA and LCA, which has been explored in the current thesis, but can be extended beyond the realm of LCA. Technology assessment, for instance, can be performed using hybrid analysis where the technology at stake and corresponding market behaviour are specified in detail within the foreground system and the surrounding background system is represented by a dynamic IO model. Combined with Social Accounting Matrices (SAM), Consumer Expenditure Survey (CES), and behavioural dynamics tools, such hybrid analysis is capable of addressing major questions in sustainable consumption issues as well.

4. Recent developments

There are a number of directly related studies that have been or are being done but were not yet fully documented at the time this thesis was written. Here I will briefly discuss these developments.

Using hybrid analysis, Suh and Huppes (2001) showed that the cut-offs of an LCA study on a flooring material contribute 8 to 73% (on average 18%) of the process-LCA results depending on the impact category considered.

Suh and Huppes (2002) presented a method to deal with the allocation problem using the Supply and Use framework from IOA. It was shown that what is known as the economic allocation method and the substitution method in LCA is equivalent to the industry-by-technology assumption and the commodity-technology assumption in IOA, respectively. By understanding this both types of allocation models can be founded in an economic theory. A step-wise method to present and compute a mixed technology assumption for a mixed unit LCA framework has also been discussed.

Suh (2003) compared the uncertainties of IO-, hybrid and process-LCA using a Monte Carlo simulation method based on the case study on Linoleum, a flooring material (see Chapter II). The results showed that in general, process LCA results exhibit a narrower dispersion but the location of the distribution is generally shifted toward the lower side, due to the

truncation problem, deviating from the expected true value. The distribution of the IO-LCA result is generally wider but covers the expected true value quite well. Hybrid LCA results show a slightly wider distribution as compared to the process LCA, but is well situated around the envisaged true value.

Mongelli *et al.*, (2004) compare the Missing Inventory Estimation Tool (MIET), an environmental input-output database for hybrid LCA (see Chapter IV) with the ETH database, one of the world's largest public LCI databases. The ETH database has been aggregated to the level of MIET and the input structure and distribution structure has been statistically analysed. The results show that the two databases share a similar input and distribution structure, while for some inputs especially capital goods, the ETH database showed a lower contribution as compared to MIET.

The MIET database used the 1996 U.S. IOT and environmental data. It has been updated very recently using the 480-by-480 U.S. IOT of 1998 and corresponding environmental data. The number of environmental interventions have been increased to 1344, now also including land use, Particulate Matter (PM) 2.5, and a number of natural resources. The updated version will be supplied together with SimaPro, a commercial LCA software package by PRé consultants. The database itself is available through CML under a new name: Comprehensive Environmental Data Archive (CEDA) (Suh, 2004).

Ferrão *et al.*, (2003) applied the hybrid approach to the case of glass production in Portugal. The study is based on detailed data from a glass making facility located in Portugal. A software tool has been built for the analysis, and the authors compared the results of hybrid LCA with those of IO and process LCA. The results show that the hybrid approach generally adds only a little to the process-LCA results but in some processes such as related to glass composition, the difference can be a factor of up to eight.

Currently ISO is preparing for a revision of ISO 14040 series. The possible amendment of ISO 14040 and ISO 14041 with regard to the system boundary problem, that is described in Chapter II, is one of the issues that are being discussed (Christiansen, 2004). Particularly, an explicit reference to the models that deal with monetary flows, such as IOT, as a way to describe, at least, background processes seems desirable (ISO 14041, 4.5).

The article in Chapter VI (Suh, 2004) evoked a series of methodological discussion notably by Giljum *et al.* (2004), Giljum and Hubacek (*in press*), and Dietzenbacher (2004). Giljum *et al.* (2004) argued that the

methodological foundation of the approaches in Suh (2004) is doubtful because: first, the direct requirement matrix of the Approach 1 contains coefficients larger than 1; second, the interpretation of the direct requirement matrix of the Approach 1 is problematic as the total inputs are divided by only usable outputs; third, some sectors may have usable output close to or equal to zero.

Dietzenbacher (2004) evaluated the three arguments by Giljum *et al.* (2004) but could not support any of the three. First, Dietzenbacher (2004) presented a sufficient condition for an Input-Output system to have a valid solution and argued that the first point by Giljum *et al.* (2004), which is a not uncommon misconception, is not appropriate. Regarding the second point of Giljum *et al.* (2004), Dietzenbacher (2004) argued that the interpretation of direct requirements matrix needs to be done in accordance with its definition, and applying the new definition, the interpretation is valid. On the third point by Giljum *et al.* (2004), Dietzenbacher (2004) suggested to simply leave out the column of zero output, which will not alter the results in any way. Furthermore, Dietzenbacher (2004) proposed an alternative, but consistent formulation of the PIOT problem and showed that the approach leads to the same solution of the Approach 1 of Suh (2004).

Giljum and Hubacek (*in press*) proposed a new, alternative method to treat waste in an PIOT, as the authors believe that the method by Suh (2004) is "unclear". The new method is then applied to a case of Germany. However, the method presented by Giljum and Hubacek (*in press*) as a new method turns out to be exactly the same as Approach 1 in Suh (2004). An in-depth discussion on the subject involving those authors on the subjects is envisaged possibly with a chapter in the handbook that is currently being prepared (see below).

Network flow analysis is rapidly developing in various fields in industrial ecology including, but not limited to, stocks and flow modelling, sustainable consumption, Integrated Product Policy, LCA, MFA and PIOT, Waste Input-Output (WIO) modelling, and database developments (Nielsen *et al.*, 2003; Hertwich, 2002; Nakamura and Kondo, 2002; Lenox *et al.*, *in press*; Gloria, 2000; UN, 2003; Graedel *et al.*, *in press*; Lenzen, 2002; Bailey, 2000). A handbook on input-output analysis in industrial ecology is being prepared to embrace these major developments in unified context (Suh *ed.*, forthcoming).

References

Bailey, R., 2000: *Input-Output Modeling of Material Flows in Industry*, Doctoral Dissertation, G.W. Woodruff School of Mechanical Engineering, Georgia Institute of Technology, Atlanta, GA. USA.

Christiansen, K., 2004: Secretary of ISO Working Group on revision of ISO 14040 series, LCA 2.0 Consultants, Copenhagen, Denmark, *Personal Communication*.

Dietzenbacher, E., 1997: In Vindication of the Ghosh Model: A Reinterpretation as a Price Model. *Journal of Regional Science* 37 (4), 629-651.

Dietzenbacher, E., 2003: Lecture in a seminar on the treatment of wastes in Physical Input-Output Tables (PIOTs) held at the Institute of Environmental Science (CML), 22nd December, Leiden University, Leiden, The Netherlands.

Dietzenbacher, E., 2004: Waste Treatment in Physical Input-Output Analysis, *Submitted*.

Ferrão, P., J. Nhambiu, S. Suh, 2003: Industrial Ecology of Portuguese Glass products based on Hybrid Input-Output Analysis, presented at 2nd International Society of Industrial Ecology (ISIE) meeting at Ann Arbor, MI, U.S.

Giljum, S. and K. Hubacek, *In Press*, Alternative Approaches of Physical Input-Output Analysis to Estimate Primary Material Inputs of Production and Consumption Activities. *Economic Systems Research*.

Giljum, S., K. Hubacek and L. Sun, 2004, Beyond the Simple Material Balance: A Reply to Sangwon Suh's Note on Physical Input-Output Analysis. *Ecological Economics*, 48 (1), 19-22.

Gloria, T., 2000: *An Approach to Dynamic Environmental Life-Cycle Assessment by Evaluating Structural Economic Sequences*, PhD dissertation, Tufts University, Massachusetts, USA.

Graedel, T.E. D. van Beers, M. Bertram, K. Fuse, R.B. Gordon, A. Gritsinin, A. Kapur, R.J. Klee, R.J. Lifset, L. Memon, H. Rechberger, S. Spatari, D. Vexler, *in press*: Multilevel Cycle of Anthropogenic Copper, *Environmental Science and Technology*.

Hertwich, E. (*ed.*), 2002: *Life-cycle Approaches to Sustainable Consumption*, Workshop Proceedings, International Institute for Applied Systems Analysis, Laxenburg, Austria.

Lennox, J. A., Turner, G., Hoffmann, R., and McInnis, B. Modelling Australian basic industries in the Australian Stocks and Flows Framework. *Journal of Industrial Ecology* (In Press).

Lenzen, M., 2002: A guide for compiling inventories in hybrid life-cycle assessments: some Australian results, *Journal of Cleaner Production*. 10, 545-572.

Mongelli, I., G. Huppes, S. Suh, 2003: A structural comparison of two approaches to Life Cycle Inventory, based on the MIET and the ETH databases. *Submitted*.

Nakamura, S., Y. Kondo, 2002: Input-Output Analysis of Waste Management. *Journal of Industrial Ecology*, 6 (1), 39 – 63.

Nielsen, A.M., K. Christiansen, B.P. Weidema, 2003: *Prioritisation of product groups and product areas in the integrated product policy*. Seminar-proceedings. LCA 2.-0 consultants, Copenhagen, Denmark.

Odum,E.P., 1969. The strategy of ecosystem development. Science, 164:262-270 pp.

Suh, S., 2003: Analysis and Comparison of Uncertainties in Input-Output, Process and Hybrid Life Cycle Inventories, Presented at SETAC-Europe annual meeting, Hamburg, Germany.

Suh, S., 2004: A Note on the Calculus for Physical Input-Output Analysis and its Application to Land Appropriation of International Trade Activities. *Ecological Economics*, 48 (1), 9-17 (Chapter VI of this dissertation).

Suh, S., 2004: CEDA 3.0 User's guide, Institute of Environmental Science (CML), Leiden University, Leiden, The Netherlands.

Suh, S., (*Ed.*), *forthcoming*: A Handbook on Input-Output Economics in Industrial Ecology, Kluwer Academic Publisher, Dordrecht, The Netherlands.

Suh, S., Huppes, G., 2001: Applications of input-output analysis for LCA - with a case study of Linoleum, presented at SETAC-Europe meeting, Madrid, Spain.

Suh, S., Huppes, G., 2002: Economic input-output models for allocation in LCA, presented at SETAC-Europe annual meeting, Wien, Austria.

Udo de Haes, H.A., Heijungs, R., Suh, S., Huppes, G., *In Press*: Three strategies to overcome the limitations of LCA, Journal of Industrial Ecology.

United Nations, 2003. *Integrated Environmental and Economic Accounting*. UN, ST/ ESA/ STAT/ SER.F/ 61/ Rev.1 (Final Draft).

Vogstad, K., 2004: *The Integration of Renewables in the Nordic Electricity Market*. Ph.D. Thesis, Norwegian University of Science and Technology (NTNU), Norway, forthcoming.

Publications in This Dissertation

Chapter	Full Reference
II	Suh, S., M. Lenzen, G. Treloar, H. Hondo, A. Horvath, G. Huppes, O. Jolliet, U. Klann, W. Krewitt, Y. Moriguchi, J. Munksgaard, G. Norris, 2004: System Boundary Selection for Life Cycle Inventories, *Environmental Science & Technology*, 38 (3), 657-664.
III	Suh. S., 2004: Functions, commodities, and environmental impacts in an ecological-economic model, *Ecological Economics*, 48 (4), 451-467.
IV	Suh, S., Huppes, G., 2002: Missing inventory estimation tool using extended input-output analysis, *International Journal of Life Cycle Assessment*, 7 (3) 134-140
V	Suh, S., Huppes, G., *In Press*: Methods in Life Cycle Inventory of a Product, *Journal of Cleaner Production*.
VI	Suh, S., 2004: A Note on the Calculus for Physical Input-Output Analysis and its Application to Land Appropriation of International Trade Activities, *Ecological Economics*, 48 (1), 9-17.
VII	Suh, S., 2004: A Comparison of Materials and Energy Flow Analysis in Ecology and Economics, *Submitted*.
VIII	Suh, S., 2004: Are Services better for Climate Change?, *Submitted*

Summary

In the modelling of linear flow networks, different disciplines have developed similar methods, using similar mathematical formulations, all with matrix inversion as a basis. These include Life Cycle Assessment (LCA), Material Flow Analysis (MFA), Input-Output Analysis (IOA) and ecological network flow analysis. By combining their adjoining and overlapping domains of application or by using the insights in one domain as inspiration and guidance in other domains, scientific improvements can be achieved and communication between closely related sciences established, to some extent even leading to combining them in hybrid analysis.

Especially in the field of LCA, there are a number of questions (see questions 1.1 and 1.2 below), which can be answered in a better way, by using insights from other domains of network flow analysis. The converse is also true, where the treatment of waste flows in IOA can be improved with insights from LCA (see question 1.3). In learning from insights in different domains of network flow analysis, the question arises if there is a common architecture in these models (question 2.1), and, if this is established, how inter-system comparisons and hybridisation may give added insight (question 2.2). With mathematical tools and interpretations aligned and integrated, there are questions to solve in application, in terms of data to fill the models (question 3.1), and in terms of adherence of LCA to ISO standards which have been set up in this field already (question 3.2). Finally, an example of application as related to climate change shows how environmentally extended IOA can help basic questions as related to policy (question 3.3).

The questions indicated above have been answered in the eight foregoing chapters, each of them based on a paper published, accepted, or submitted to scientific journals. Most of the questions were discussed in more than one chapter. Here per question an encompassing answer is given.

Finally, results are discussed in the conclusions and discussions together with on-going researches and recent developments.

Theme 1. Modelling Choices in Analysing Materials and Energy Flow Networks

Question 1.1. "*How to systematically broaden the system in LCA without loss of resolution?*".

In Chapter 4, the model structure of LCA is reformulated as a functional flow-by-process framework and it is inter-connected with IOA in a single matrix. The resulting integrated hybrid LCA model enables full feedback

loops between the two systems, including inputs from the embedding economy to the detailed functional flow-based system and *vise versa*, and expands the system while preserving all process-level detailed information. Various analytical algorithms that have been developed for LCA and IOA can be applied to the integrated hybrid model without loss of consistency. Structural Path Analysis (SPA) is applied to the hybrid system as an example.

Using hybrid analysis, a case study showed that the cut-offs of an LCA study on a flooring material contribute 8 to 73% of the process-LCA results depending on the impact category considered.

Question 1.2. "*What are the available approaches in LCA computation, and what can be best approaches for different types of application?*"

In Chapter V, in total six techniques for Life Cycle Inventory (LCI) computation of a product system are distinguished. These are: computation using a process flow diagram; matrix expression of the process relations; input-output (IO) based LCI; and three different forms of hybrid analysis: the tiered hybrid analysis; the IO-based hybrid analysis; and the integrated hybrid analysis. These approaches are evaluated with regard to data requirements, uncertainty of source data, upstream system boundary, technological system boundary, geographical system boundary, available analytical algorithms for interpretation, time and labour intensity, simplicity of application, required computational tools, and available software tools. Matrix representation of a product system clearly is superior to the flow diagram method for all but the most simplified systems. Pure IO-based LCI can at best be used as a first proxy. When comparing the pure process-based LCI with the integrated hybrid analysis, the latter has a clear advantage in terms of the quality of the result, especially in terms of system completeness. However, it adds to the cost of already expensive and time-consuming full process LCA. A rational strategy at a case level could be to follow a step-wise approach. The step-wise approach can start with only a few centrally important processes worked out in detail, that is quite cheap and fast, while all background processes are covered by IOA. Then, focused on where main contributions and uncertainties are, a stepwise build-up of resolution can follow, until a sufficient quality of result has been obtained. At all steps of development, there always is a full and consistent system definition, with resolution being added as required.

Question 1.3. "*Are there consistent approaches of treating wastes in PIOT? If so, which one is the most desirable?*"

Yes, there are. In Chapter VI, two consistent but different approaches to cope with the problem of waste in PIOT are presented, with their proofs. In approach 1 it is assumed that only the usable output of an industry is

responsible for all factor inputs to the industry regardless of whether these are actually transformed into wastes or whether these go into usable products. Approach 2 assumes that the waste and the usable output of an industry are equally responsible for the factor inputs to the industry, in proportion to their mass. It should be noted that the very motivation for a productive process being operated is the economic value of its usable outputs. It is this economic motive which is causing the waste to be generated, as an unwanted side effect. So approach 1 is argued to be more appropriate in the context of analysing economic activities.

Theme 2. A Common Architecture for Analysing Materials and Energy Flow Network

Question 2.1. "*Is there a common architecture in materials and energy flow network analysis in economics, LCA, MFA and ecology?*"

Yes, there is. In Chapter VII, a generalised framework for materials and energy flow analysis is proposed, based on the duality of input-side balance and output-side balance. The generalised framework embraces network flow models of industry and ecology. General relationships between existing network flow analysis approaches in ecology, namely, environ analysis, total flow analysis, endogenised input approach, use of transitive closure matrices are derived by means of the generalised framework. The framework is also applicable for the network flow structures in both LCA and MFA..

Question 2.2. "*If so, can these be used to gain insights by eg, inter-system comparisons or hybridisation?*"

One obvious advantage of having a common architecture that can be shared by network flow analyses of different disciplines is that systems with differing system definitions can be integrated wherever useful, without loss of consistency. The integrated hybrid model developed in Chapter III is possible only because the IO model and LCA model have been reformulated so as to share certain commonalities with regard to the fundamental assumptions, especially on how the information on materials and energy flows is structured in matrices.

A generalised framework also enables insights by providing a level ground for comparison. For instance, in Chapter VII, it is shown that independent proposals of network flow analysis in ecology often use Ghosh's supply-driven model, while the demand-driven model by Leontief has been the general practice in input-output economics. This fact reflects that the driving factors in an ecological system are the primary inputs from nature, while those in an economic system are the outputs to households, that is final

consumption. In that sense, the demand-driven model is operated as if an economic system were free from the inputs from outside such as natural resources and solar energy. In that sense, the generalised framework opens up options for integrated economic-environmental analysis. Also, this framework is useful in translating the findings of one discipline for use in another. For instance, Odum's findings on ecosystem resilience and those on recycled flows in industrial ecology can both be better understood on the basis of the generalised framework.

Theme 3. Model Implementation

Question 3.1. "*Where are the data sources, and how to build a large scale environmental database for the use in LCA. IOA, hybrid LCA, MFA and broader industrial ecology applications?*"

In Chapter IV, the method and US data for compiling an environmental intervention-by-commodity database are presented. The resulting database contains 1170 kinds of different environmental interventions including emissions of greenhouse gases (GHGs), ozone layer depleting substances, and toxic emissions, eutrophying and acidifying substances, and the extraction of fossil fuels. The use of Supply and Use framework in deriving the intervention-by-commodity matrix, which often has been neglected, is presented as well. In Chapter II, the available IOTs and environmental data of 6 countries are reviewed, showing that data availability for environmental IOA is still limited but improving.

Question 3.2. "*Is hybrid LCA in compliance with ISO standards? If not, what would be useful amendments on current ISO standards*"

In Chapter II, it is argued that, although current ISO standards are based on process analysis, according to clause 4.5 of ISO 14041, they do not preclude the use of an input-output model to describe a product system (or part of one). Moreover, it is shown that selecting a system boundary in compliance with ISO standards is, in fact, impossible without using the input-output model, and hybrid techniques using input-output analysis can and should therefore form a central element in an ISO-compatible method for boundary identification.

Question 3.3. "*Can moving towards a services-oriented economy cure our environmental problems, including those of climate change?*"

In Chapter VIII, the patterns of GHG emission induced through supply-chain networks in the US are analyzed for 21 GHGs. Service sectors emit less than 5% of the total US GHG emission, and their average GHG emission intensity

per dollar of output is less than one tenth of those of all other sectors, taking into account emissions induced through supply-chains (0.04kg CO_2 eq./$ versus 0.47kg CO_2 eq./$). However, focusing on household expenditure, services are responsible for 37.6% of the total industrial GHG emissions in the US, which is almost twice as much as for household consumption on electricity and transportation. So, a shift to service-oriented economy, under the current structure, entails a decrease in GHG emission intensity per unit of GDP, but will not automatically reduce the overall GHG emission in absolute terms.

In the chapter on Conclusions and Discussion (Chapter IX) major findings and recommendations are listed. A number of issues reflected from the 8 prior chapters including the strengths and weaknesses of the network flow analysis, the basic concept of hybrid analysis as a general modelling strategy, and the interpretation of supply-driven model as a quantity model are discussed. A number of on-going discussions related to the study have been presented as well.

The generalised conceptualisation that is consistent with the work of several now distinct research communities opens up new questions, crossing over the borders of these communities, which could not be readily addressed before. A few examples of such questions are:

- How are the materials and energy flows of an ecosystem structured to enable homeostasis and what does it imply for understanding the structure of an envisaged sustainable society?

- What are the differences in materials and energy cycles between industrial systems and ecosystems, why have such differences been made and what are the design principles that can be applied in industrial ecology?

- How have similar concepts in different disciplines, such as keystone species in ecology and key sector identification in IOA, been developed and applied in other disciplines and what can we learn from them?

- How can the concept of hybrid analysis be further applied in different fields beyond the realm of LCA?

High priority future research topics include: (1) the use of the general framework of network flow analysis for assessing options for applying E. Odum's theory of ecological succession also in industrial ecology and in an integrated ecology-economy model, especially focussing on the integration or hybridisation between the Ghosh's supply-driven model and Leontief's demand driven model; (2) a comparison between food web research in

ecology and network flow analysis modelling in other disciplines, notably IOA; and (3) the implications of different waste treatment approaches in PIOT for decision support.

Samenvatting

Bij het modelleren van lineaire stromingsnetwerken hebben verschillende disciplines vergelijkbare methoden ontwikkeld, gebruikmakend van soortgelijke wiskundige formuleringen, alle op basis van matrixinversie. Voorbeelden van deze methoden zijn Life Cycle Assessment (LCA), Material Flow Analysis (MFA), Input-Output Analysis (IOA) en de stromingsanalyse van ecologische netwerken. Het combineren van aangrenzende en overlappende toepassingsdomeinen, dan wel het toepassen van inzichten verkregen in het ene domein als inspiratiebron en leidraad in andere domeinen, kan resulteren in wetenschappelijke verbeteringen en het openen van communicatiekanalen tussen nauw verwante takken van wetenschap, tot op zekere hoogte zelfs leidend tot een combinatie in de vorm van hybride analyse.

Met name op het gebied van LCA zijn er vragen (zie vragen 1.1 en 1.2 hieronder) die beter kunnen worden beantwoord door gebruik te maken van inzichten uit andere domeinen van de netwerkstroomanalyse. Het omgekeerde is evenzeer het geval: de behandeling van afvalstromen in IOA kan worden verbeterd met behulp van inzichten verkregen uit LCA (zie vraag 1.3). Bij het benutten van inzichten verkregen uit verschillende domeinen van netwerkstroomanalyse doet zich de vraag voor of er een gemeenschappelijke architectuur in deze modellen valt te ontdekken (vraag 2.1) en zo ja, hoe vergelijkingen en hybridisering tussen systemen onderling kunnen leiden tot beter inzicht (vraag 2.2). Na onderlinge afstemming en integratie van wiskundige hulpmiddelen en interpretaties kunnen vragen worden beantwoord op toepassingsgebied, over de benodigde gegevens voor het invullen van de modellen (vraag 3.1) en over de mate waarin LCA voldoet aan de eerder op dit gebied vastgestelde ISO-normen (vraag 3.2). Ter afsluiting geeft een toepassingsvoorbeeld op het gebied van klimaatverandering aan hoe het uitbreiden van IOA op milieugebied van nut kan zijn bij het beantwoorden van elementaire vragen voor beleid (vraag 3.3). De hierboven aangegeven vragen zijn in de acht voorgaande hoofdstukken beantwoord op basis van artikelen die zijn gepubliceerd, geaccepteerd, of ingediend bij wetenschappelijke tijdschriften. De meeste van deze vragen kwamen in verscheidene hoofdstukken aan bod. Hier wordt per vraag een algeheel antwoord gegeven.

De uiteindelijke resultaten zijn besproken in de conclusies en beschouwingen, samen met verdergaand onderzoek en recente ontwikkelingen.

Thema 1. Modelkeuzen bij het analyseren van materiaal- en energiestroomnetwerken.

Vraag 1.1. "Hoe kan het systeem in LCA systematisch worden verbreed zonder de resolutie nadelig te beïnvloeden?".

In hoofdstuk 4 is de modelstructuur van LCA geherformuleerd in een stroom-per-proces structuur op functiebasis, verbonden met IOA in een enkele matrix. Dit levert een geïntegreerd hybride LCA-model op dat volledige terugkoppeling tussen beide systemen mogelijk maakt, inclusief de inputs vanuit de omvattende economie naar het gedetailleerde functionele systeem, en omgekeerd. Het systeem wordt zodoende uitgebreid met behoud van alle detailinformatie op procesniveau. Diverse voor LCA en IOA ontwikkelde analytische algoritmen kunnen zonder verlies van consistentie worden toegepast op het geïntegreerde hybride model. Als voorbeeld is Structural Path Analysis (SPA) op het hybride systeem toegepast. Gebruikmakend van hybride analyse is in een case-study aangetoond dat de *cut-offs* bij deze LCA-studie van een vloerbedekkingsmateriaal tussen 8 en 73% aan de resultaten van de proces-LCA toevoegden, afhankelijk van het beschouwde milieu-aspect.

Vraag 1.2. "Welke benaderignen zijn er voor LCA-berekeningen en wat zou de beste benadering zijn voor verschillende toepassingen?"

In hoofdstuk V zijn in totaal zes technieken onderscheiden voor de berekening van de Life Cycle Inventory (LCI) van een productsysteem, namelijk:

- Berekening met behulp van een processtroomschema;
- Weergave in een matrix van procesrelaties;
- LCI op basis van input-output (IO);
- Sequentiële hybride analyse;
- Hybride analyse op basis van input-output;
- Geïntegreerde hybride analyse.

Deze vormen van aanpak zijn geëvalueerd met betrekking tot de vereiste gegevens, de onzekerheid van de brongegevens, de systeembegrenzing van de voorliggende processen, de technologische systeembegrenzing, de geografische systeembegrenzing, de beschikbare analytische algoritmen voor interpretatie van de resultaten, de benodigde tijd en inspanning, de eenvoud van toepassing en de vereiste rekenapparatuur en –programmatuur. De weergave van een productsysteem in een matrix duidelijk superieur aan de methode op basis van een stroomdiagram, behalve voor sterk vereenvoudigde systemen. Zuiver op IO gebaseerde LCI kan het beste worden gebruikt voor een eerste benadering. Bij vergelijking van LCI op louter procesbasis met de geïntegreerde hybride analyse biedt de laatste duidelijke voordelen wat betreft de kwaliteit van het resultaat, vooral qua

volledigheid van het systeem. Daar staat tegenover dat deze analyse kostenverhogend, additioneel aan de toch al dure en tijdrovende LCA op basis van processpecificaties. Een rationele strategie op case-niveau zou het volgen van een stapsgewijze aanpak kunnen zijn. Deze aanpak kan beginnen met het in detail uitwerken van slechts enkele kernprocessen, hetgeen vrij goedkoop en snel kan gebeuren, terwijl alle achtergrondprocessen met behulp van IOA worden gespecificeerd. Vervolgens kan, met de nadruk op de belangrijkste bijdragen en onzekerheden, een stapsgewijze opbouw van de resolutie plaatsvinden, totdat een resultaat van voldoende kwaliteit is verkregen. Tijdens elke ontwikkelingsstap is er altijd een volledige en consistente systeemdefinitie, waaraan naar behoefte resolutie kan worden toegevoegd.

Vraag 1.3. "Zijn er consistente methoden voor het behandelen van afvalstromen in PIOT ('physical input-output tables')? Zo ja, welke verdient dan de voorkeur?"

Ja, die zijn er. In hoofdstuk VI zijn twee consistente maar verschillende methoden voor de aanpak van het afvalprobleem in PIOT gepresenteerd, met de nodige bewijzen.

Bij methode 1 is aangenomen dat uitsluitend de bruikbare productie van een bedrijfstak verantwoordelijk is voor alle factorinputs naar de bedrijfstak, ongeacht of deze werkelijk in afvalmateriaal worden omgezet dan wel aan bruikbare producten bijdragen.

Methode 2 gaat ervan uit dat de afvalstroom en de bruikbare productie van een bedrijf in gelijke mate verantwoordelijk zijn voor de factorinputs naar de bedrijfstak en wel naar verhouding van hun massa's. Men dient echter te bedenken dat het bestaansrecht van een productieproces afhangt van de economische waarde van de bruikbare producten van dat proces. Deze economische drijfveer zorgt ervoor dat afval wordt geproduceerd, als ongewenst neveneffect. Daarom is de eerste methode beter geschikt bij het analyseren van economische activiteiten.

Thema 2. Een gemeenschappelijke architectuur voor het analyseren van materiaal- en energiestroomnetwerken.

Vraag 2.1. "Is er een gemeenschappelijke architectuur voor het analyseren van materiaal- en energiestroomnetwerken in de economische wtenschap, LCA, MFA en de ecologie?"

Ja, die is er. In hoofdstuk VII is een voorstel gedaan voor een algemeen kader voor de analyse van materiaal- en energiestromen op basis van de dualiteit van de input-balans en de output-balans. Het algemene kader omvat

netwerkstroommodellen uit economie en ecologie. Algemene betrekkingen tussen bestaande methoden voor netwerkstroomanalyse in de ecologie, te weten environanalyse, totaalstroomanalyse, de geëndogeniseerde aanpak van de invoer en het gebruik van *transitive closure matrices*, worden afgeleid uit het veralgemeniseerde kader. Dit kader is bovendien toepasbaar op de netwerkstroomstructuren in zowel LCA als MFA.

Vraag 2.2. "Als er een gemeenschappelijke architectuur is, kan deze dan worden gebruikt om inzicht te verwerven door bijvoorbeeld het vergelijken of hybridiseren van systemen?"

Een duidelijk voordeel van een gemeenschappelijke architectuur die kan worden gedeeld door netwerkstroomanalyses van verschillende disciplines is dat systemen met verschillende systeemdefinities kunnen worden geïntegreerd wanneer dat nuttig blijkt, zonder verlies van consistentie. Het in hoofdstuk III ontwikkelde geïntegreerde hybride model is slechts mogelijk doordat het IO-model en het LCA-model zodanig zijn geherformuleerd dat zij bepaalde eigenschappen gemeen hebben met betrekking tot de fundamentele uitgangspunten, en dan vooral de manier waarop de informatie over materiaal- en energiestromen in matrices wordt gestructureerd.

Een algemeen kader verbetert bovendien het inzicht doordat het een gemeenschappelijk vergelijkingsniveau biedt. Zo is bijvoorbeeld in hoofdstuk VII aangetoond dat verschillende toepassingen van netwerkstroomanalyse in de ecologie vaak gebruik maken van het aanbodmodel van Ghosh, terwijl het vraagmodel van Leontief algemeen wordt toegepast in de input-output economie. Dit geeft aan dat de drijvende krachten in een ecologisch systeem worden gevormd door de primaire input vanuit de natuur, terwijl dat in een economisch systeem de output naar de consument is. Zo wordt het vraagmodel gebruikt alsof een economisch systeem geen inputs van buitenaf kent zoals in de vorm van grondstoffen en zonne-energie. Het algemene kader biedt mogelijkheden voor geïntegreerde milieu-economische analyse. Bovendien is het kader nuttig bij het vertalen van de resultaten van de ene discipline voor toepassing in een andere. Zo kunnen bijvoorbeeld de conclusies van Odum over het herstellingsvermogen van ecosystemen evenals de conclusies over stromen bij hergebruik in de industriële ecologie beter worden begrepen met het algemene kader als basis.

Thema 3. Modelimplementatie

Vraag 3.1. "Waar vind ik de bronnen voor gegevens en hoe zet ik een grootschalige milieudatabase op voor toepassing in LCA, IOA, hybride LCA, MFA en verdere industriëel-ecologische toepassingen?"

In hoofdstuk IV zijn de methode en Amerikaanse gegevens gepresenteerd

voor het opzetten van een milieudatabase op basis van interventie-per-product. Deze database bevat 1170 verschillende milieu-interventies, waaronder de emissies van broeikasgassen, de ozonlaag aantastende stoffen, de emissies van giftige stoffen, eutrofiërende en verzurende stoffen, en de winning van fossiele brandstoffen. Verder is het gebruik van het supply-and-use kader voor het afleiden van de interventie-per-product-matrix uitgewerkt, een ten onrechte vaak verwaarloosde benadering.

In hoofdstuk II zijn de beschikbare IOT's en de milieugegevens van zes landen besproken, waarbij is aangetoond dat gegevens voor IOA op milieugebied nog schaars zijn, maar in toenemende mate beschikbaar komen.

Vraag 3.2. "Voldoet hybride LCA aan de ISO-normen? Zo niet, wat zijn dan nuttige aanvullingen op bestaande ISO-normen?"

In hoofdstuk II is betoogd dat de bestaande ISO-normen weliswaar zijn gebaseerd op procesanalyse, maar dat zij, gezien paragraaf 4.5 van ISO 14041, het gebruik van een input-output-model voor het beschrijven van (een deel van) een productsysteem niet in de weg staan. Bovendien is aangetoond dat het selecteren van een systeemgrens conform ISO-normen in feite onmogelijk is zonder gebruik te maken van het input-output-model, en dat hybride technieken met gebruikmaking van input-output-analyse een centraal element kunnen — en dus moeten — vormen in een methode voor het vaststellen van begrenzingen die aan de ISO-normen voldoet.

Vraag 3.3. "Kan een verschuiving naar een op diensten gerichte economie onze milieuproblemen verhelpen, met inbegrip van de klimaatverandering?"

In hoofdstuk VIII is het emissiepatroon van broeikasgassen geanalyseerd voor 21 broeikasgassen, zoals geïnduceerd in aanbodketens in de V.S. De emissies van de dienstensector bedragen minder dan 5% van de totale emissies van broeikasgassen in de V.S. en hun gemiddelde emissieintensiteit aan broeikasgassen per dollar product is minder dan eentiende van die in alle overige sectoren, met inbegrip van de uitstoot in de aanbodketens (0,04 kg CO_2-eq. per dollar c.q. 0,47 kg CO_2-eq. per dollar). Als we echter kijken naar uitgaven door huishoudens, is de dienstverlenende sector verantwoordelijk voor 37,6% van de totale industriële uitstoot van broeikasgassen in de V.S. en dat is bijna tweemaal zo veel als de uitstoot ten gevolge van verbruik van elektriciteit en transport door huishoudens. Hieruit blijkt dat een verschuiving naar een op diensten gerichte economie binnen de huidige structuur weliswaar leidt tot een afname in de uitstootintensiteit van broeikasgassen per eenheid bruto binnenlands product, maar niet automatisch een absolute verlaging van de algehele uitstoot aan broeikasgassen inhoudt.

In de conclusies en beschouwingen in hoofdstuk IX is een opsomming gegeven van belangrijke resultaten en aanbevelingen. Enkele aspecten uit de acht voorgaande hoofdstukken zijn hier besproken, waaronder de plus– en minpunten van de netwerkstroomanalyse, het basisconcept van hybride analyse als algemene modelstrategie en de interpretatie van een aanbodmodel als een kwantiteitsmodel. Verder is een aantal lopende discussies aangaande het onderzoeksonderwerp aan bod gekomen.

De algemene conceptualisatie die aansluit op het werk van diverse nu losstaande onderzoeksgroeperingen roept nieuwe vragen op die de grenzen tussen deze groeperingen doen vervagen en die voorheen niet zomaar konden worden beantwoord. Voorbeelden van dergelijke vragen zijn:

- Hoe kunnen de materiaal- en energiestromen van een ecosysteem zo worden gestructureerd dat homeostase tot stand komt en wat houdt dit in voor het begrip van de structuur van een duurzame maatschappij zoals nagestreefd?
- Wat zijn de verschillen tussen industriële systemen en ecosystemen qua materiaal- en energiecycli, waarom zijn die verschillen er en welke ontwerpprincipes kunnen we toepassen in de industriële ecologie?
- Hoe zijn vergelijkbare concepten in verschillende disciplines, zoals hoeksteensoorten (*keystone species*) in de ecologie en sleutelsectoridentificatie in IOA, ontwikkeld en in andere disciplines toegepast, en wat kunnen wij daarvan leren?
- Hoe kan het concept van hybride analyse verder worden toegepast op verschillende gebieden buiten de sfeer van LCA?

Onderwerpen die dringend nader onderzoek behoeven zijn onder andere: (1) het gebruik van het algemene kader van netwerkstroomanalyse voor het evalueren van de mogelijkheden om de ecologische successietheorie van E. Odum ook toe te passen in industriële ecologie, en tevens in een geïntegreerd ecologisch-economisch model gericht op het samenvoegen of hybridiseren van het aanbodmodel van Ghosh en het vraagmodel van Leontief; (2) een vergelijking tussen voedselwebonderzoek in de ecologie en het modelleren van netwerkstroomanalyses in andere disciplines, met name IOA; en (3) de implicaties van verschillende methoden van behandeling van afvalstromen in PIOT voor beslissingsondersteuning.

Curriculum Vitae

General

Name	Sangwon Suh
Date of Birth	9th June, 1973
Place of Birth	Seoul, South Korea
Education	B.E., Environmental Engineering, Ajou University (1998)
	M.S., Environmental Engineering, Ajou University (2000)
	Ph.D., Environmental Science, Leiden University (2004, expected)
Employment	Ministry of Defense, Serg. (Army) (Jan. 1994 - Mar. 1996)
	Ajou University, Research Assistant (Mar.1998 - Feb. 2000)
	Leiden University, Research Assistant (Mar.2000 - Dec.2002)
	Leiden University, Research Scientist (Jan.2003 -)

External activities

2003 ~ present	Subject Editor, *International Journal of Life Cycle Assessment*
2002 ~ present	Steering Committee Member, *Society of Environmental Toxicology and Chemistry*
2002 ~ present	Convenor, *SETAC and ISIE joint working group on input-output economics for industrial ecology.*
2003 ~ present	Member of TF3 and TF5, *UNEP / SETAC Life Cycle Initiative*
2002 ~ 2003	Peer Review Group Member, *UNEP / SETAC Life Cycle Initiative*

Books

Heijungs, R., Suh, S., 2002: *The Computational Structure of Life Cycle Assessment*, Kluwer Academic Publisher, Dordrecht, The Netherlands.

Guinée, J.B., M. Gorrée, R. Heijungs , G. Huppes, R. Kleijn, A. de Koning, L. van Oers, A. Wegener Sleeswijk, S. Suh, H.A. Udo de Haes, H. de Bruijn, R. van Duin, M.A.J. Huijbregts, 2002: *Handbook on Life Cycle Assessment. Operational Guide to the ISO Standards*. Kluwer Academic Publishers, Dordrecht, The Netherlands.

Articles

Suh, S., 2004: Functions, commodities and environmental impacts in an ecological economic model, *Ecological Economics*, 48 (4), 451-467.

Suh, S., 2004: A Note on the Calculus for Physical Input-Output Analysis and its Application to Land Appropriation of International Trade Activities, *Ecological Economics*. 48 (1), 9 – 17.

Suh, S., M. Lenzen, G. Treloar, H. Hondo, A. Horvath, G. Huppes, O. Jolliet, U. Klann, W. Krewitt, Y. Moriguchi, J. Munksgaard, G. Norris, 2004: System

Boundary Selection for Life Cycle Inventories, *Environmental Science & Technology*. 38 (3), 657 – 664.

Suh, S., Huppes, H., *In Press*: Methods in Life Cycle Inventory (LCI) of a product, *Journal of Cleaner Production*,

Suh, S., 2004: The Portrait of Wassily Leontief, *International Journal of Life Cycle Assessment*, Editorial, 9 (1), 1.

Suh, S., 2003: Input-Output and Hybrid Life Cycle Assessment. *International Journal of Life Cycle Assessment*, Editorial, 8 (5), 257.

Suh, S., Duchin F., 2003: Industrial Ecology for a Sustainable Future. *International Journal of Life Cycle Assessment*, 8 (5), 315 – 316.

Suh, S., Huppes, H., 2002: Missing inventory estimation tool using extended input-output analysis, *International Journal of Life Cycle Assessment*, 7 (3) 134-140.

Suh, S., 2004: Are Services better for Climate Change?, *Submitted*.

Suh, S., 2004: A Comparison of Materials and Energy Flow Analysis in Ecology and Economics, *Submitted*.

Rebitzer, G., T. Ekvall, R. Frischknecht, D. Hunkeler, G. Norris, W.-P. Schmidt, S. Suh, B.P. Weidema, D.W. Penington, *In Press*: Life Cycle Assessment: Goal & Scope Definition, Inventory Analysis and Applications (Part 1), 2004: *Environment International*. 30 (5), 701 – 721.

Huijbrecht, M., L. van Oers, A. de Koning, G. Huppes, S. Suh, L. Breedveld, 2002: Normalisation figures for environmental life-cycle assessment: The Netherlands (1997/1998), Western Europe (1995) and the world (1990 and 1995), *Journal of Cleaner Production*, 11, 737–748.

Rebitzer, G., A. Köhler, S. Suh, W. Klöpffer, O. Jolliet, K. Saur, 2003: Theory and Practical Implementation of Life Cycle Assessment. *International Journal of Life Cycle Assessment*, 8 (4), 235 – 240.

Mongelli, I., G. Huppes, S. Suh, 2004: A structural comparison of two approaches to life cycle inventory using the MIET and the ETH databases, *Submitted*.

Heijungs, R., Suh, S., 2003: Reformulation of matrix-based LCI: from product balance to process balance, *Submitted*.

Heijungs, R., S. Suh, R. Kleijn, 2003: Numerical approaches to life cycle interpretation: The case of the Ecoinvent database, *Submitted*.

Working Papers

Suh, S., 2004: *Comprehensive Environmental Data Archive (CEDA) 3.0. User's Guide*, Institute of Environmental Science (CML), Leiden University, Leiden, The Netherlands.

Suh, S., 2003: *Accumulative structural path analysis for life cycle assessment*. CML Working Paper, CML, Leiden University, the Netherlands.

Suh, S., 2002: *Linear Models for Life Cycle Assessment*. CML Working Paper, CML, Leiden University, the Netherlands.

Suh, S., 2001: *A hybrid model for environmental systems analysis - Supply and Use framework for Life Cycle Assessment*. CML Working Paper, CML, Leiden University, the Netherlands.

Suh, S., 2001: *Macroeconomic Stability by means of Convergence Conditions of Infinite Product of a Matrix : A Note on the 'Correct' Economic Interpretation of*

the Hawkins-Simon Condition by Jeong (1982), CML Working Paper, CML, Leiden University, Leiden, The Netherlands.

Suh, S., Heijungs, R., 2001: *Conditions of Power Series Expansion for Input-Output Systems with Mixed Measures*, CML Working Paper, CML, Leiden University, Leiden, The Netherlands.

Suh, S., 2001: *Missing Inventory Estimation Tool (MIET) version 2.0. Users' Guide*, CML, Leiden University, the Netherlands.

Suh, S., 2001: *Generalised calculus of allocation in Life Cycle Assessment - Implications of economic models*. CML Working Paper, CML, Leiden University, the Netherlands.

Suh, S., Huppes, G., 2000: *Gearing input-output model to LCA - Part I: General framework for hybrid approach*, CML Working Paper, CML, Leiden University, Leiden, the Netherlands.

Presentations

The weight of information, *11th LCA case study symposium, Joint SETAC-Europe and ISIE meeting*, 2003. Lausanne, Switzerland.

Dynamic Frameworks in Industrial Ecology, *2nd ISIE meeting*, 2003. Ann Arbor, US.

Industrial Ecology of Information Society - The weight of information, *2nd ISIE meeting*, 2003. Ann Arbor, US.

Analysis and Comparison of Uncertainties in Input-Output, Process and Hybrid Life Cycle Inventories, *Society of Environmental Toxicology And Chemistry (SETAC)-Europe meeting*, 2003. Hamburg, Germany.

Environmental Impacts of Domestic and Imported Commodities in the US Economy, *14th International Input-Output Association Meeting*, 2002. Montréal, Canada.

Computational Structure of Integrated Hybrid LCA of a Product, 2002: 5th International Conference on EcoBalance, Tsukuba, Japan.

Environmental Impacts of Domestic and Imported Commodities in U.S. Economy, 2002: 5th International Conference on EcoBalance, Tsukuba, Japan.

Gearing Input-Output Analysis to Environmental Systems Analysis – Integrated Hybrid Life Cycle Assessment, *14th International Input-Output Association Meeting*, 2002. Montréal, Canada.

Economic input-output output models for allocation in LCA - make and use framework for LCA, *Society of Environmental Toxicology And Chemistry (SETAC)-Europe meeting*, 2002. Wien, Austria.

Applications of input-output analysis for LCA - with a case study of Linoleum, *Society of Environmental Toxicology And Chemistry (SETAC)-Europe meeting*, 2001. Madrid, Spain.

Quantitative Data Quality Assessment for Normalization Reference, *InLCA conference*, 2000. Washington, USA.

Invited lectures and Courses

Hybrid Life Cycle Assessment, 2003: North Atlantic Treaty Organization (NATO) Advanced Science workshop, *NATO*, Budapest, Hungary.

Environmental Input-Output Analysis and Life Cycle Assessment, 2003: Seminar by

Industrial Ecology Program, *Norwegian University of Science and Technology (NTNU)*, Trondheim, Norway.

Input-Output and Hybrid Life Cycle Assessment, 2003: Short Course, *International Society of Industrial Ecology (ISIE)*, Ann Arbor, US.

Input-Output and Hybrid Life Cycle Assessment, 2003: Short Course, *The Society of Environmental Toxicology and Chemistry (SETAC) Europe*, Hamburg, Germany.

Hybrid Life Cycle Assessment, 2003: Seminar by Green Design Institute, *Carnegie Mellon University*, Pittsburgh, US.

Accumulative Structural Path Analysis for the U.S., 2003: Danish Integrated Product Policy (IPP) Workshop, *Danish Environmental Protection Agency*, Copenhagen, Denmark.

Input-Output Analysis and Life Cycle Assessment, 2002: Short Course, *The Society of Environmental Toxicology and Chemistry (SETAC) Europe*, Wien, Austria.

Techniques for estimating emissions intensities, 2002: Sustainable Consumption Workshop, *International Institute of Applied Systems Analysis (IIASA)*, Laxenburg, Austria.

Input-Output and Hybrid Life Cycle Assessment, 2002: Master's Program, *Swiss Federal Institute of Technology, Lausanne (EPFL)*, Switzerland.

Input-Output Environmental Life Cycle Assessment, 2002: Short Course, *Swiss Federal Institute of Technology, Lausanne (EPFL)*, Switzerland.

Issues and Approaches in Life Cycle Assessment, 2002: 105th Chemical Systems Engineering Seminar, *University of Tokyo*, Tokyo, Japan.

Current Issues in Life Cycle Assessment, 2002: Seminar by Department of Economics, *Waseda University*, Tokyo, Japan.

Bridging Socio-economics and Environmental Science for Industrial Ecology, 2002: Graduate course, *Institute of Advanced Technology (IST)*, Portugal.

Greenhouse gas emissions in U.S. and the role of recycling for climate policy, 2002: Seminar, *Waste Policy Institute (WPI)*, Tokyo, Japan.

Input-Output Analysis and Life Cycle Assessment for Industrial Ecology, 2002: *Korea Atomic Energy Research Institute (KAERI)*, Deajun, South Korea.

Life-Cycle Supply-Chain Management and Hybrid Techniques for the Automotive Sector, 2002: Seminar, *Hyundai Motor Company (HMC)*, Seoul, Korea.

Databases

Missing Inventory Estimation Tool (MIET) ver. 1.0., 2001. *Released by Institute of Environmental Science and Technology (CML)*, Leiden University, The Netherlands.

Missing Inventory Estimation Tool (MIET) ver. 2.0., 2001. *Released by Institute of Environmental Science and Technology (CML)*, Leiden University, The Netherlands.

Missing Inventory Estimation Tool (MIET) ver. 3.0., 2004. *Released by PRé Consultants*, Amersfoort, The Netherlands.

Comprehensive Environmental Data Archive (CEDA) 3.0., 2004. *Released by EnviroInformatica, Co.*, Seoul, Korea.

Honors

Dec. 2003	2003 AT&T Industrial Ecology Fellowship.
Dec. 2003	Best Oral Presentation, Joint SETAC-Europe and ISIE meeting.
Dec. 2002	2002 AT&T Industrial Ecology Fellowship.
Feb. 2002	CML Best Scientific Publication Award.
Apr. 1998	The 4th Annual POSCO Prize for best articles.